PICCOLINO concrete washbasin 30,8x17cm, mixer on the right, pink matt

Order code: PK30521

Basic information

Brand:	Sapho
Series:	SMALL

Size

Width:	308 mm
Height:	106 mm
Depth:	170 mm

Properties

Colour:	Red/Pink
Material:	Concrete
Installation:	Into furniture, Wall-hung - Screws
Type of washbasin:	Cloakroom basin
Tap hole:	1 tap hole
Overflow:	No
Shape:	Rectangle
Weight / Piece:	3.19 kg
Packaging:	1 Piece
Warranty:	2 years

We recommend buy

1 Piece Washbasin waste 5/4“, click-clack, concrete plug, 10-80mm, pink matt (Order code: FG921)
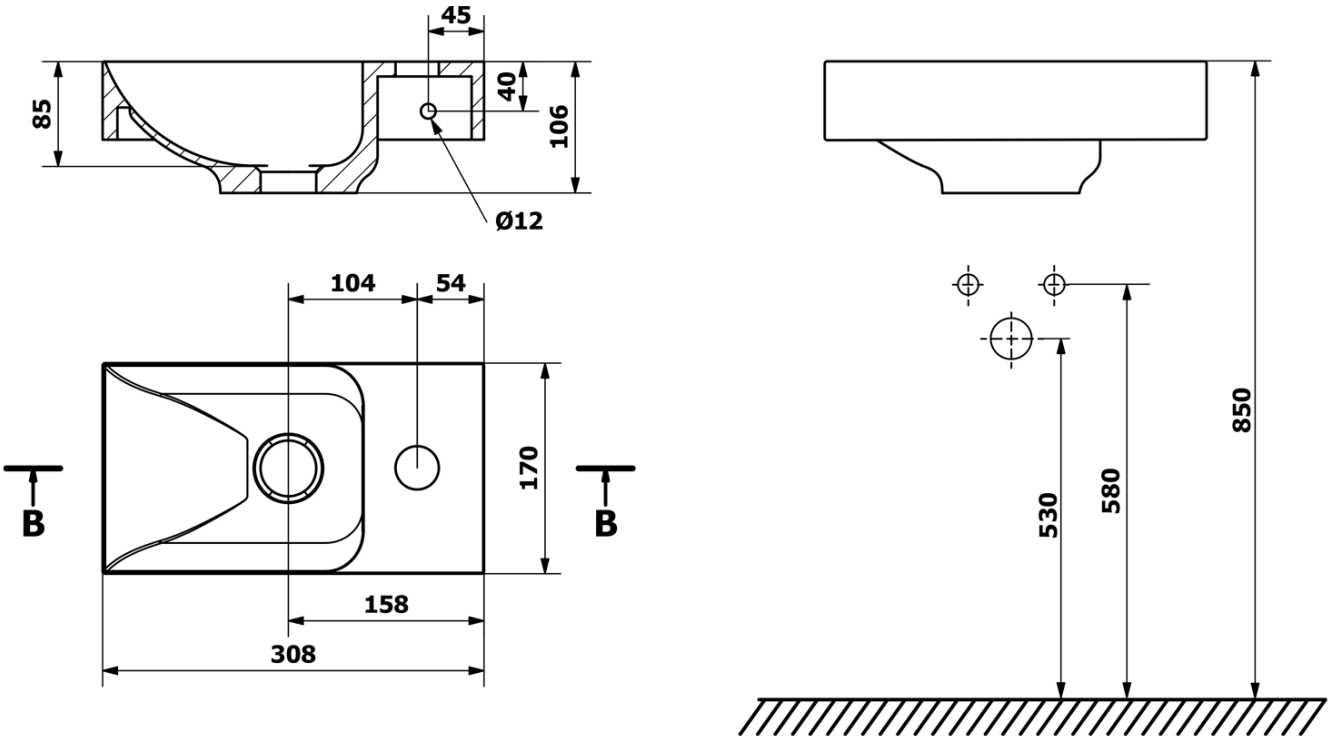
Technical sheet