Washbasin overflow set, ABS/chrom grid

Order code: 247.304.0

Properties
Material: Plastic
Warranty: 2 years
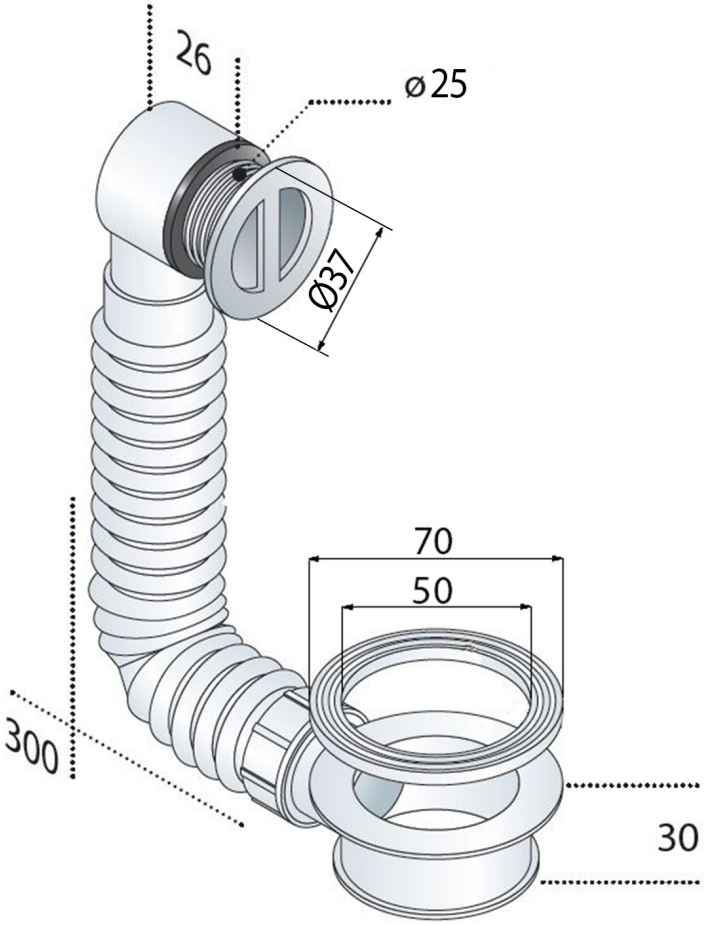
Technical sheet