TRENECA shower tray waste,dia. 90mm, DN40, gun metal cover

Order code: 84999.60

Properties

Colour:	Gun metal
Material:	Plastic
Warranty:	2 years

Technical sheet
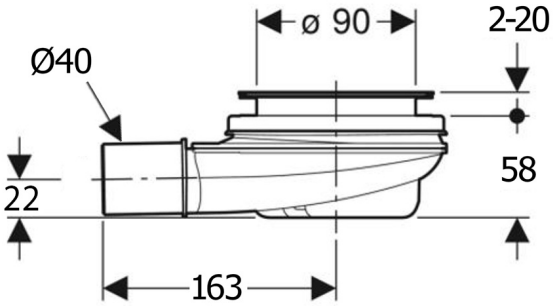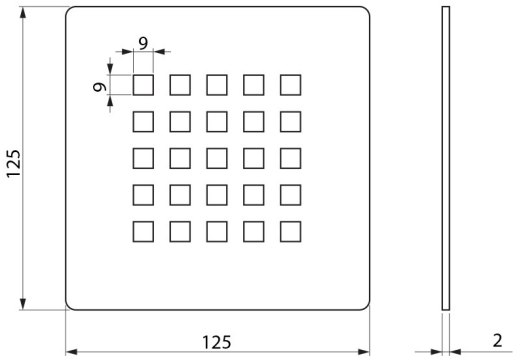
Průtok l/min: 30
Flow rate l/m: 30