# Washbasin siphon 5/4", waste 32mm, round, gold matt

**Order code:** SI519D

**Properties**

| | |
|---|---|
| Colour: | Gold matt |
| Material: | Brass |
| Warranty: | 2 years |

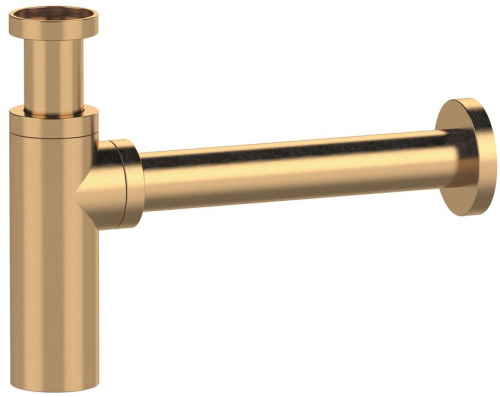
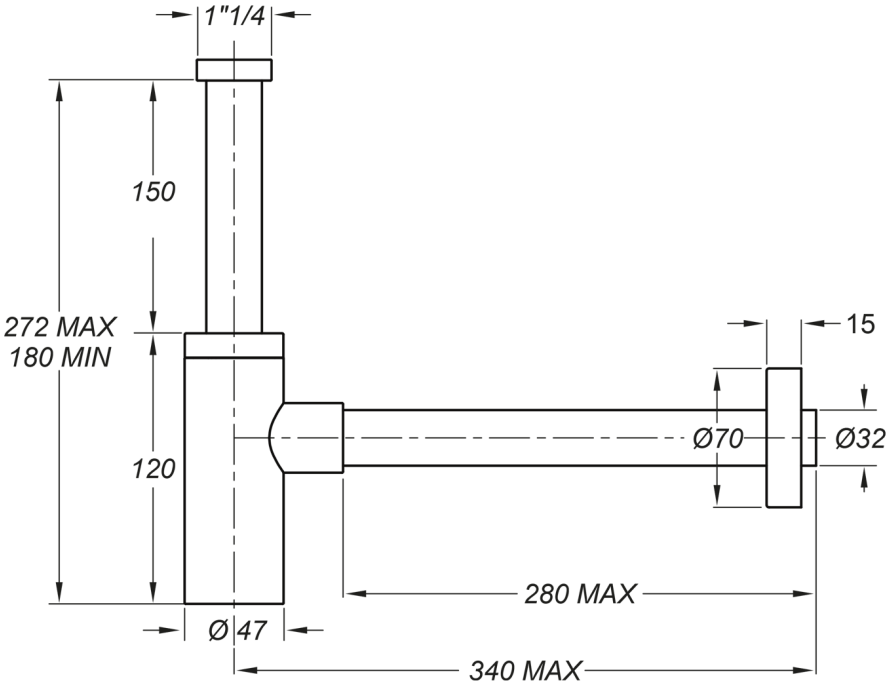
## Technical sheet