X-ROUND E corner glass shelf with rail 255x60x230mm, chrome

Order code: XR605

Size

Length:	325 mm
Width:	325 mm
Height:	60 mm
Depth:	255 mm

Properties

Colour:	Chrome
Material:	Brass
Warranty:	10 years
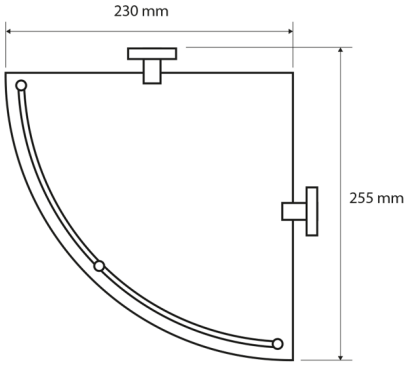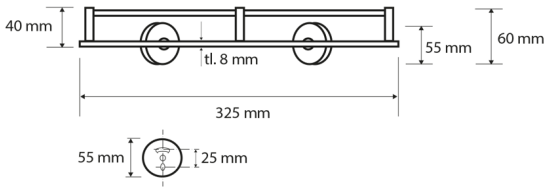
Technical sheet