ULTRASAN 3 Hole Washbasin Mixer Tap, black matt

Order code: UT017VB

Size
Height: 235 mm

Properties
Colour: Black matt
Material: Brass
Warranty: 6 years
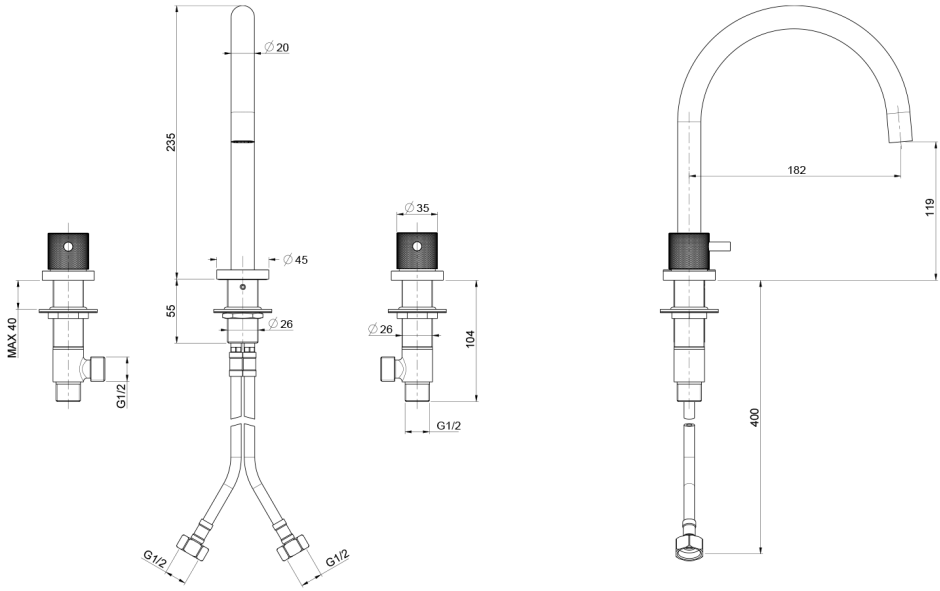
Technical sheet