ULTRATAP 3 Hole Washbasin Mixer Tap, black matt/gold matt

Order code: UT017TBG

Size
Height: 235 mm

Properties
Warranty: 6 years
Colour: Black matt
Material: Brass
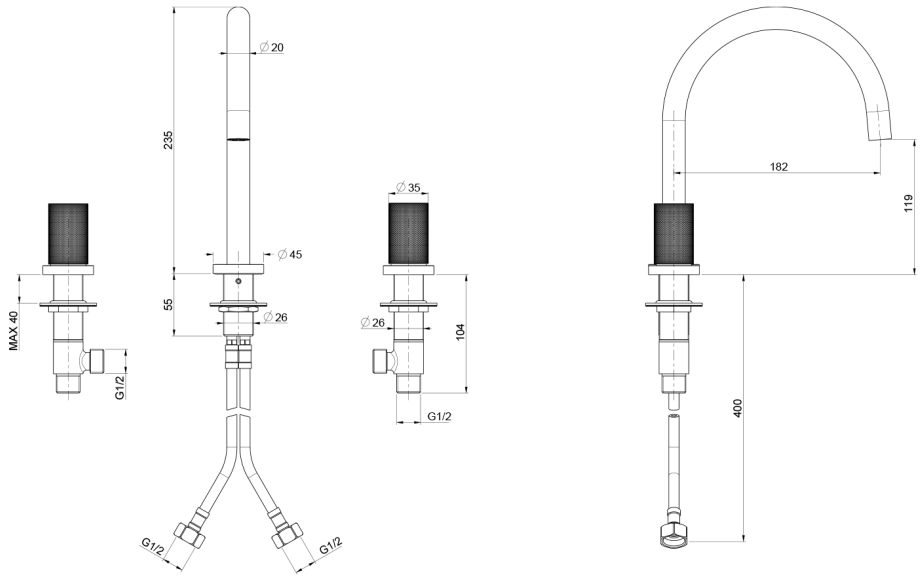
Technical sheet