# ULTRATAP 3 Hole Washbasin Mixer Tap, black matt/chrome

**Order code:** UT017TBC

**Size**
Height: 235 mm

**Properties**
Warranty: 6 years
Colour: Black matt
Material: Brass
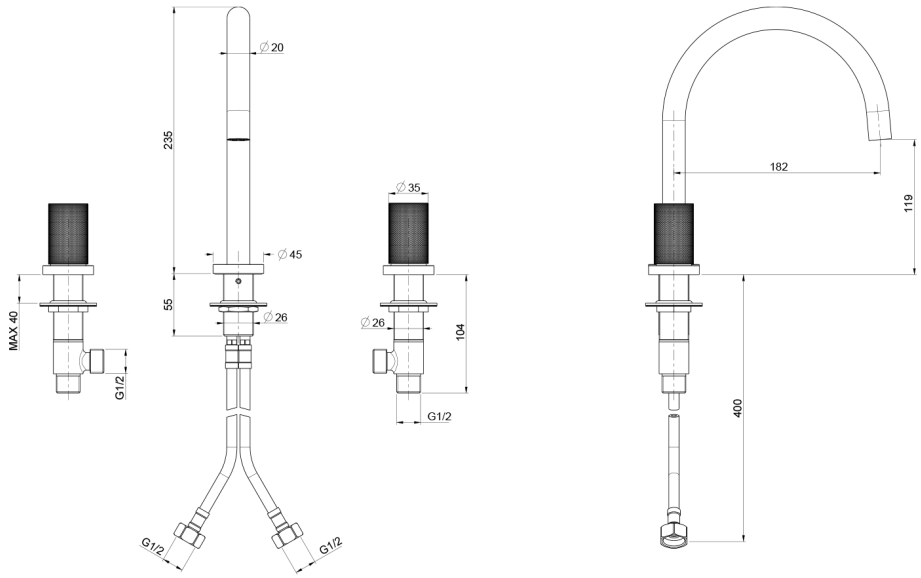
## Technical sheet