AVVA Slim Soft-close toilet seat, latte matt

Order code: 100787-114

Size
Width: 355 mm
Depth: 447 mm

Properties
Colour: Beige
Material: Duroplastic
Warranty: 2 years
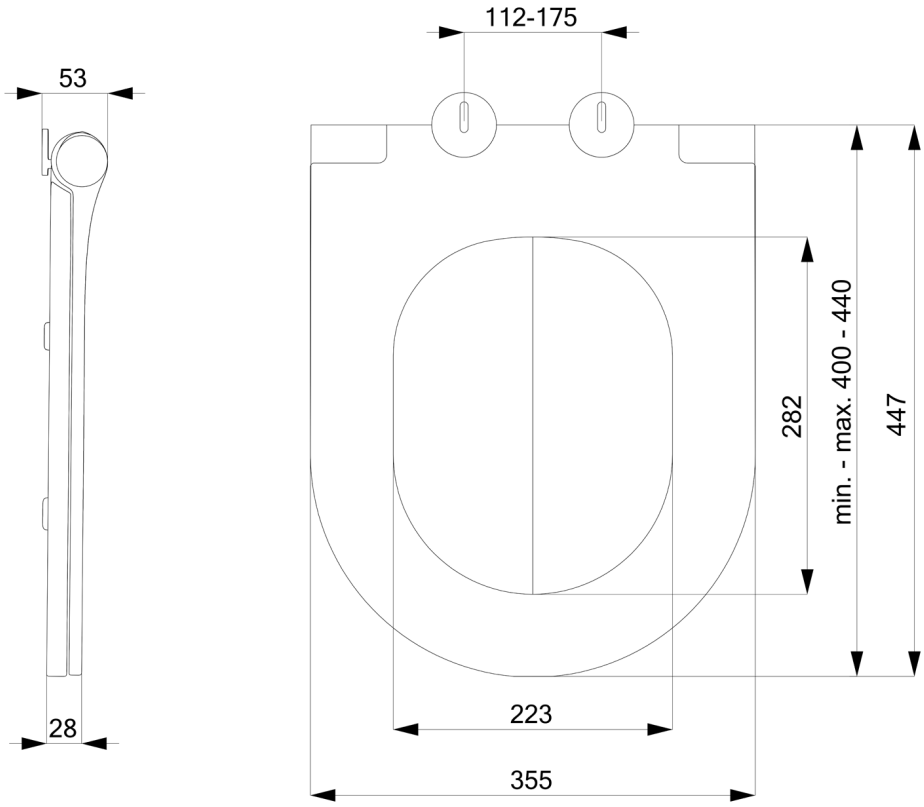
Technical sheet