AVVA Slim Soft-close toilet seat, green matt

Order code: 100787-128

Size
Width: 355 mm
Depth: 447 mm

Properties
Colour: Green
Material: Duroplastic
Warranty: 2 years
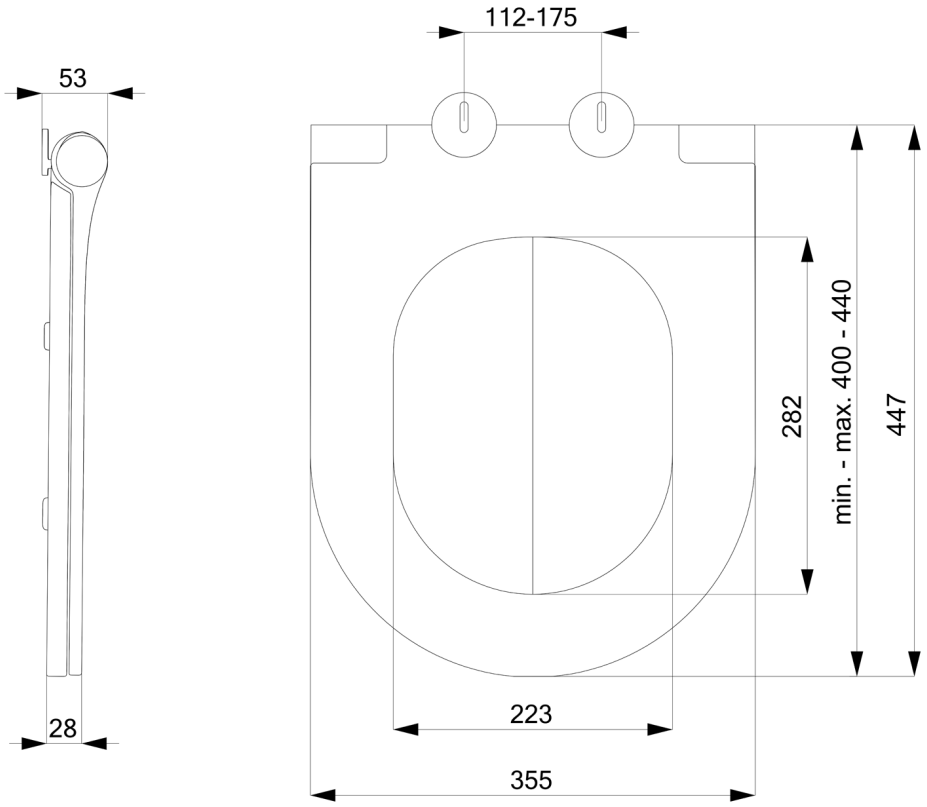
Technical sheet