RHAPSODY concealed thermostatic shower mixer including hand shower, 2/3 outlets, chrome

Order code: 5508-01

Properties

Colour:	Chrome
Material:	Brass
Warranty:	6 years

Technical sheet

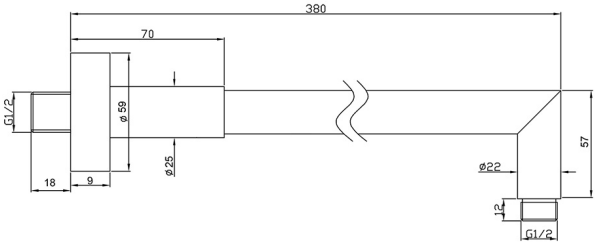

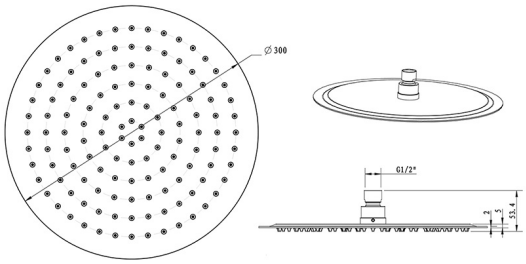

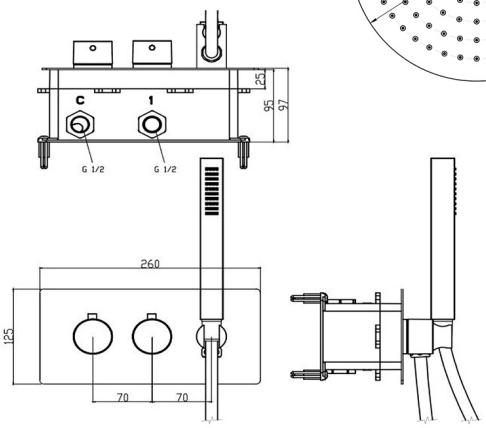

UBC s.r.o., Mělnická 87, 250 65 Líbeznice

e-mail: info@ubc-group.cz web: www.ubc-group.cz