SPY concealed shower set with lever mixer, adjustable switch, 2 outlets, gold matt

Order code: PY42/19-01

Properties

Colour:	Gold matt
Material:	Brass
Warranty:	2 years
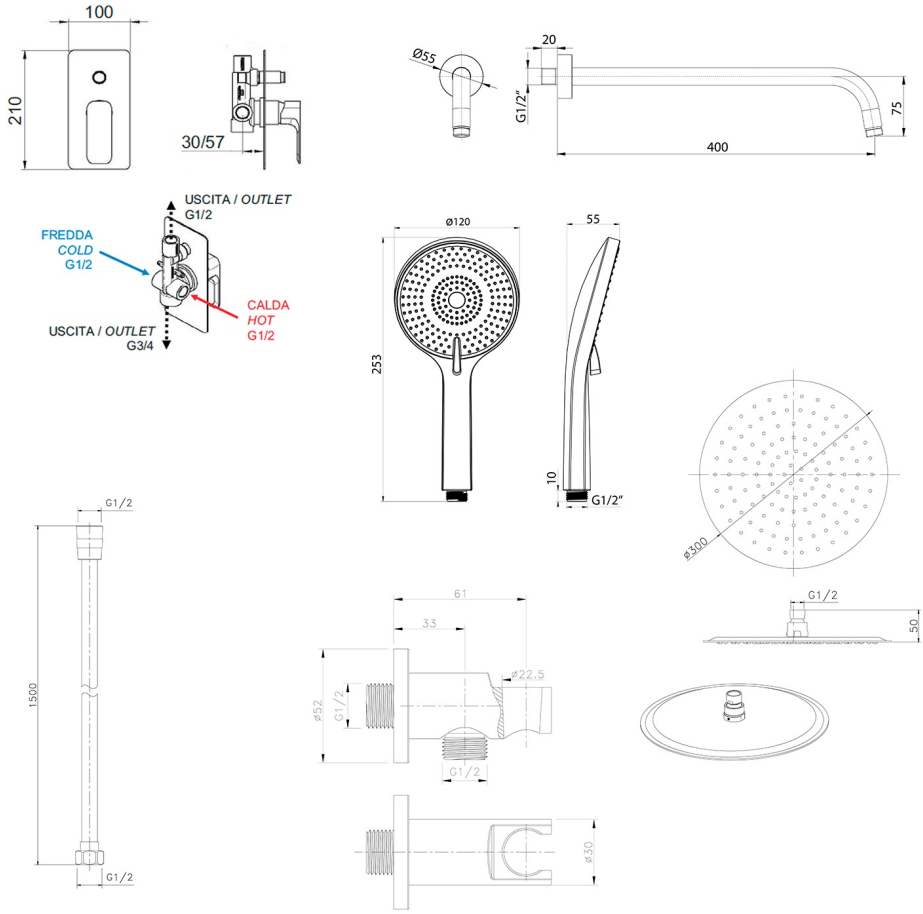
Technical sheet