PURA towel rail holder 82cm, chrome

Order code: PAPRD82

Size
Length: 820 mm

Properties
Colour: Chrome
Warranty: 2 years

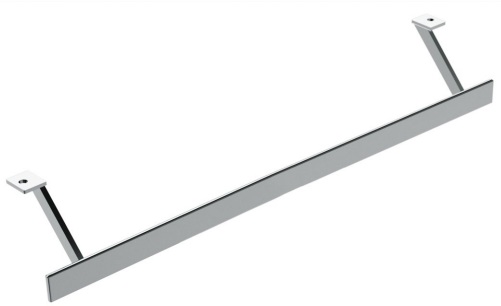
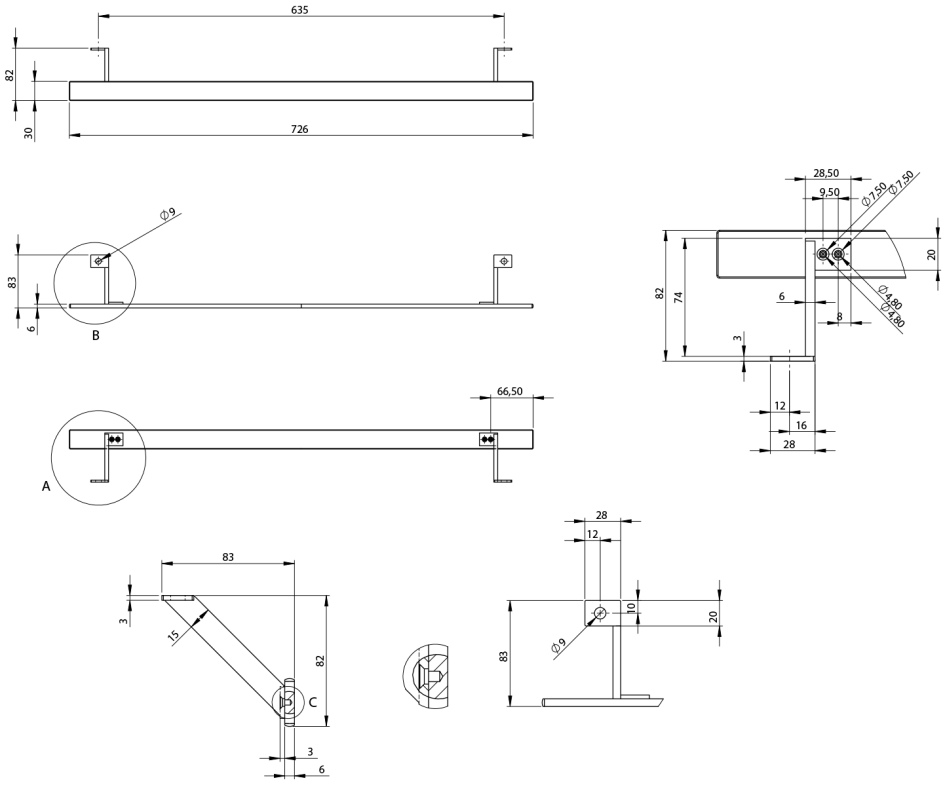
Technical sheet