PURA towel rail holder 62cm, chrome

Order code: PAPRD62

Size
Length: 620 mm

Properties
Colour: Chrome
Warranty: 2 years

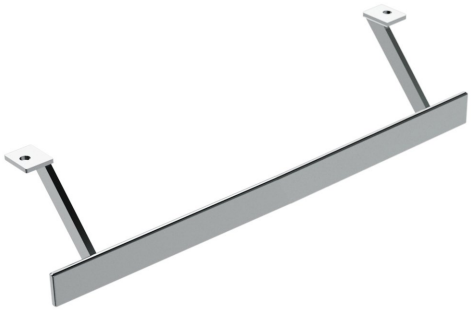
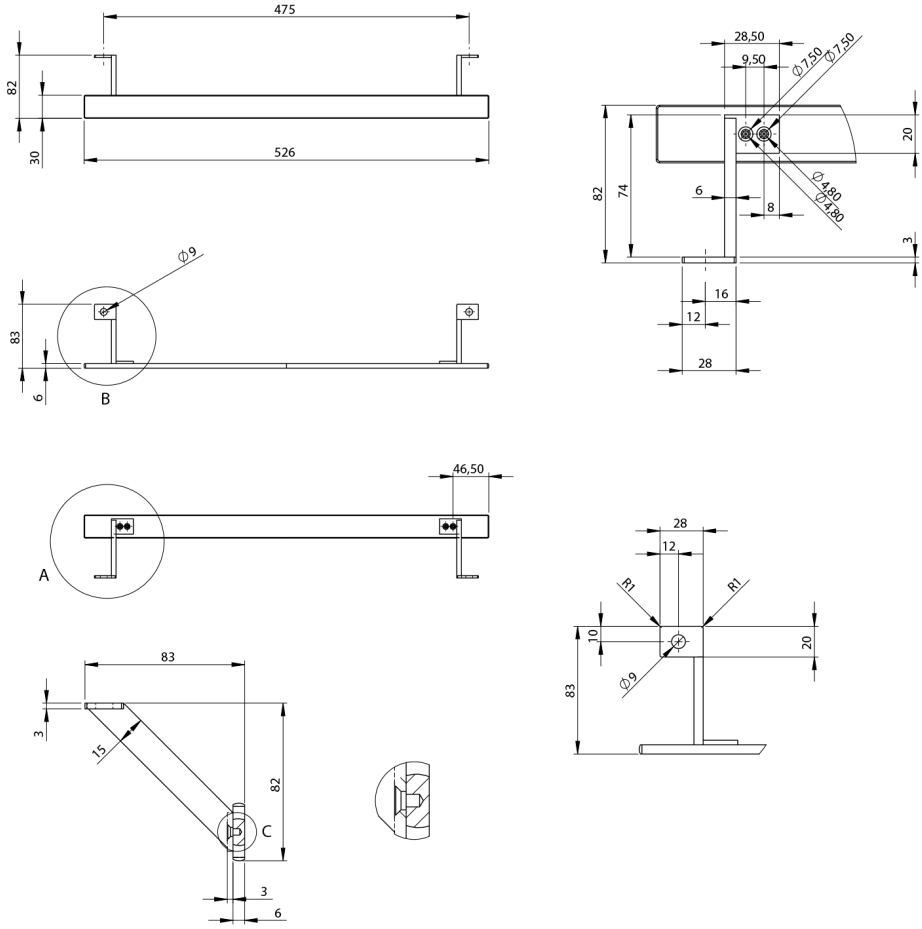
Technical sheet