PURA towel rail holder 102cm, chrome

Order code: PAPRD102

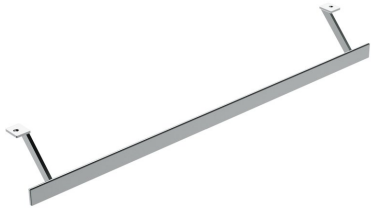

Size
Length: 1020 mm

Properties
Colour: Chrome
Warranty: 2 years
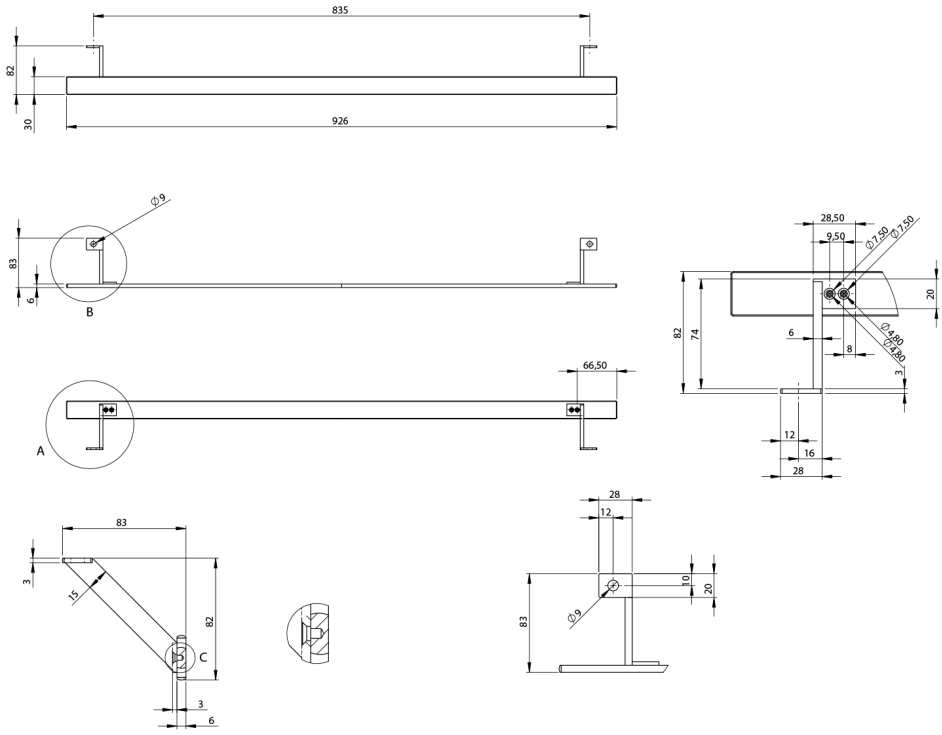
Technical sheet