KUBE X ceramic washbasin 60x37cm, no tap hole, white ExtraGlaze

Order code: 9454011

Size

Width:	600 mm
Height:	160 mm
Depth:	370 mm

Properties

Colour:	White
Material:	Ceramic
Warranty:	2 years

Technical sheet

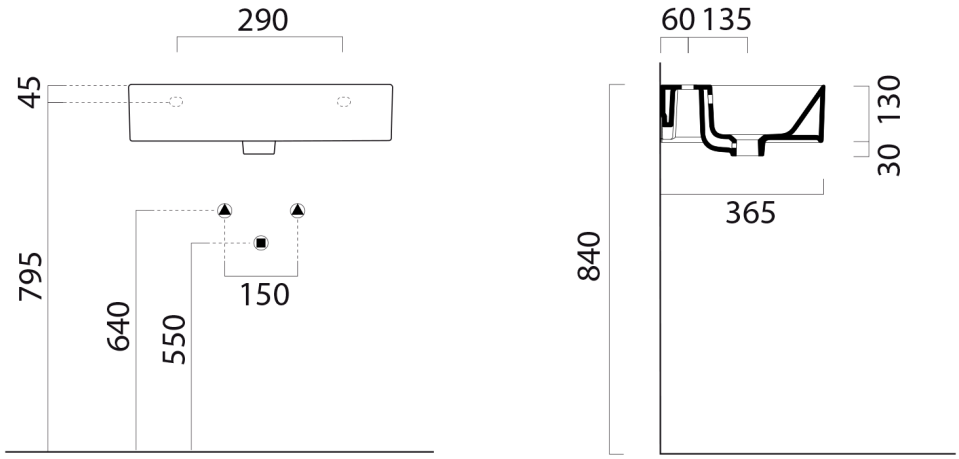

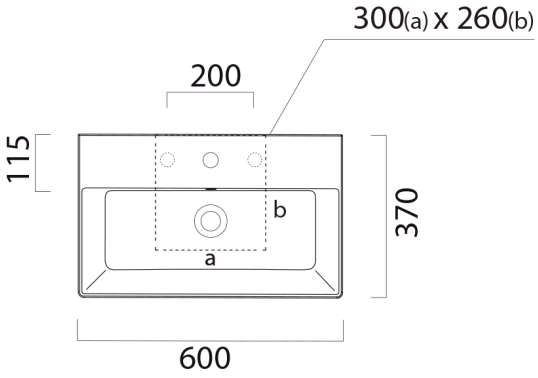

UBC s.r.o., Mělnická 87, 250 65 Líbeznice

e-mail: info@ubc-group.cz web: www.ubc-group.cz