SMART SELECT concealed thermostatic shower mixer, box, 2 outlets, gold matt

Order code: RP032GB

Size
Width: 170 mm
Height: 170 mm

Properties
Colour: Gold matt
Material: Brass
Warranty: 6 years
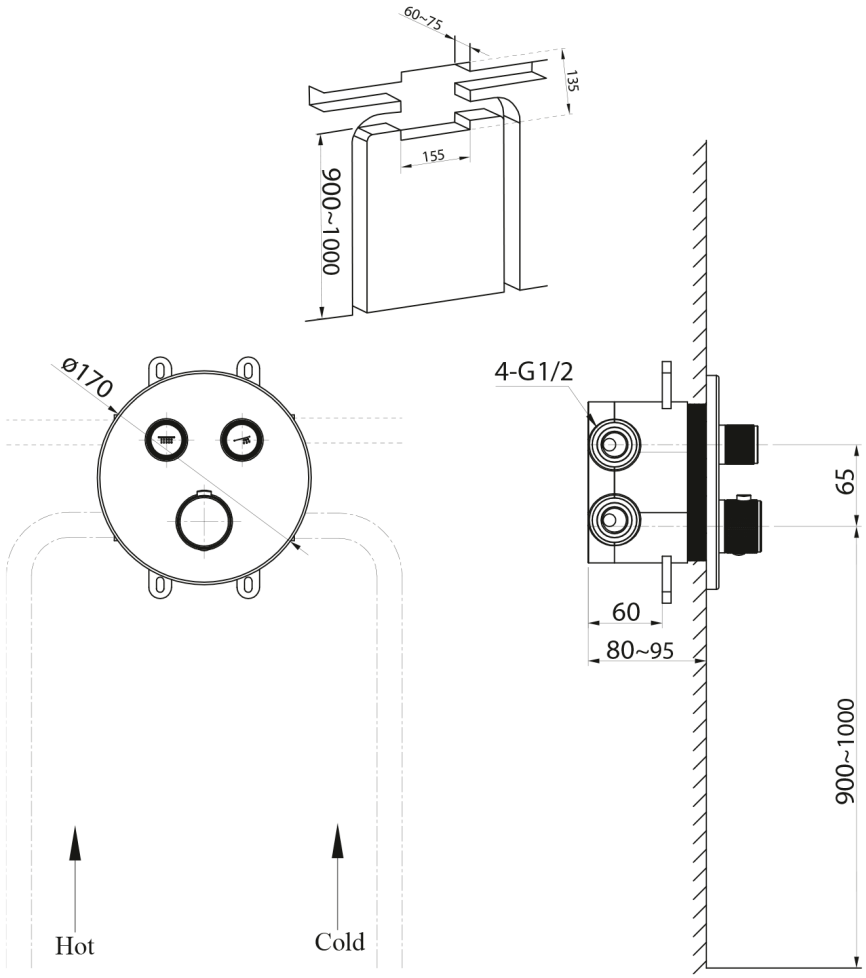
Technical sheet