Bathroom set LATUS X 40, silver oak/white

Order code: KSET-079

Size
Width: 400 mm

Properties
Colour: Grey
Decor: Oak silver
Material: MDF/laminate
Warranty: 2 years

Technical sheet

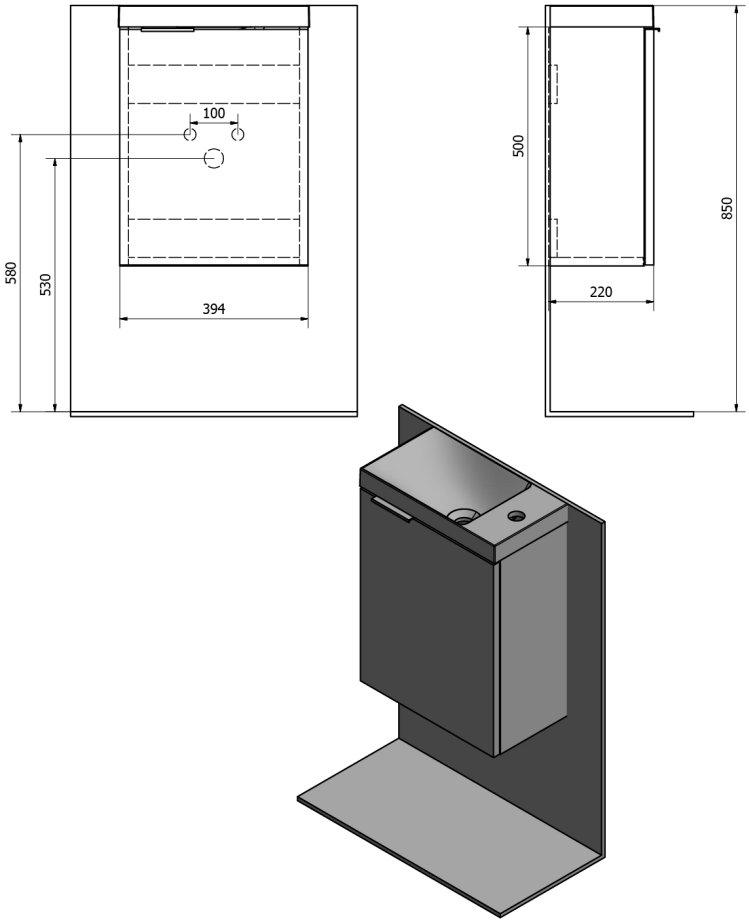

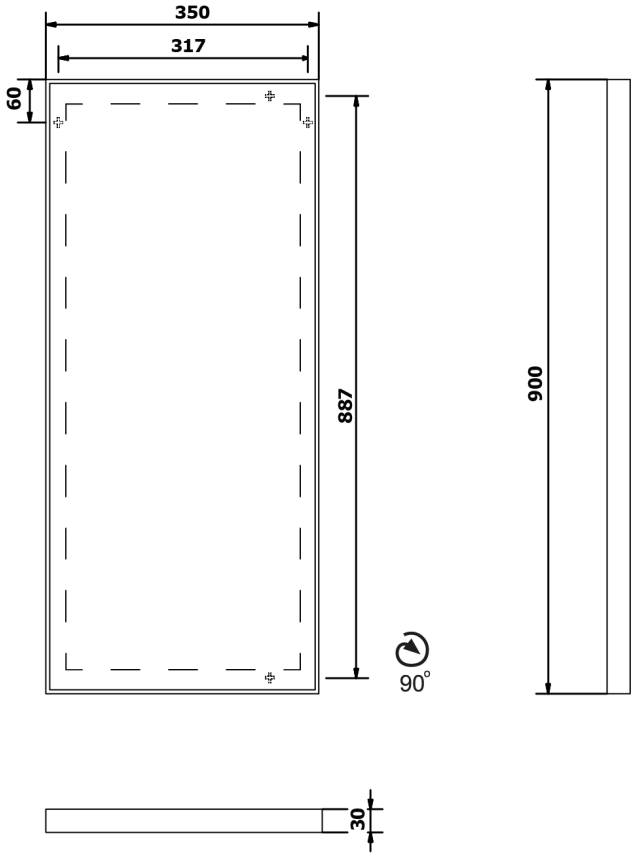
350
317
60
887
900
90°
30

Bathroom set LATUS X 40, silver oak/white

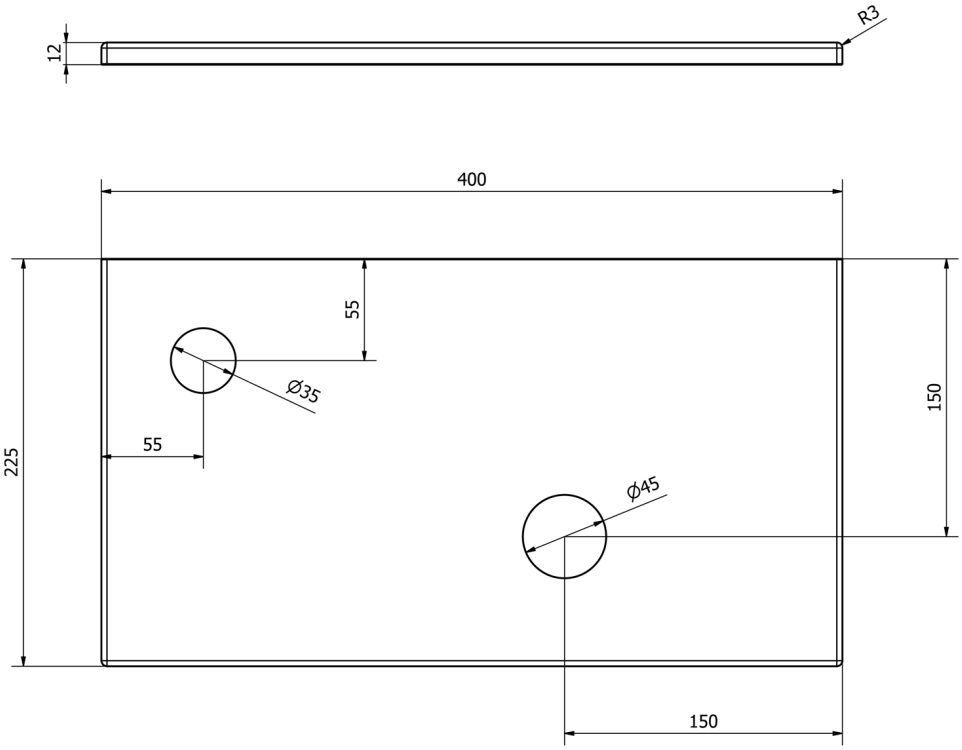

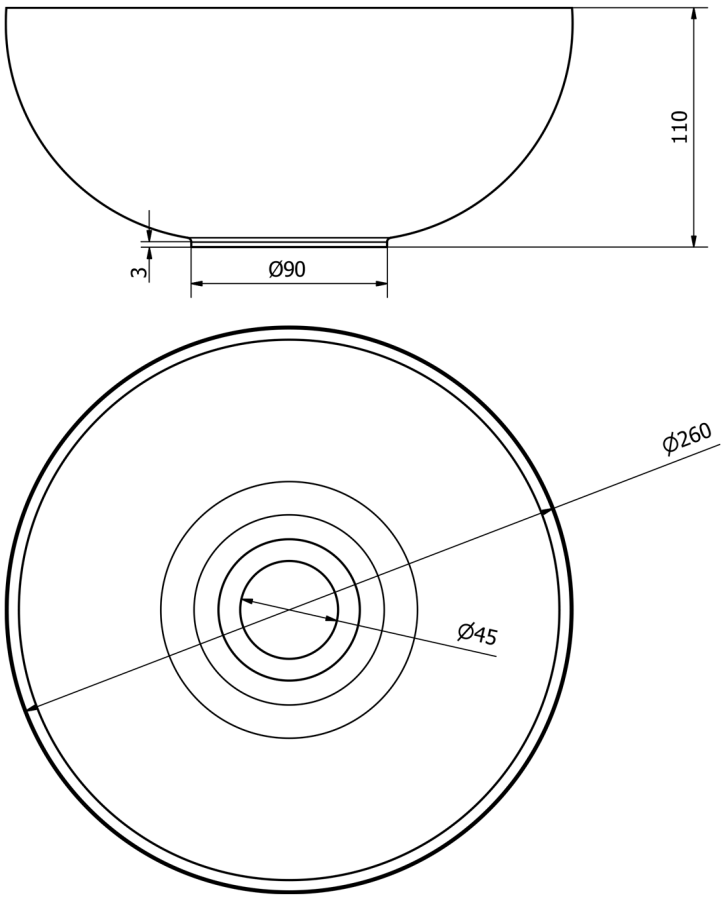
110
3
Ø90
Ø260
Ø45