FLAWO Kitchen Mixer Tap with Pull Out Spray, copper matt

Order code: FR576PG

Size
Height: 433 mm
Depth: 222 mm

Properties
Colour: Copper
Material: Brass
Warranty: 6 years
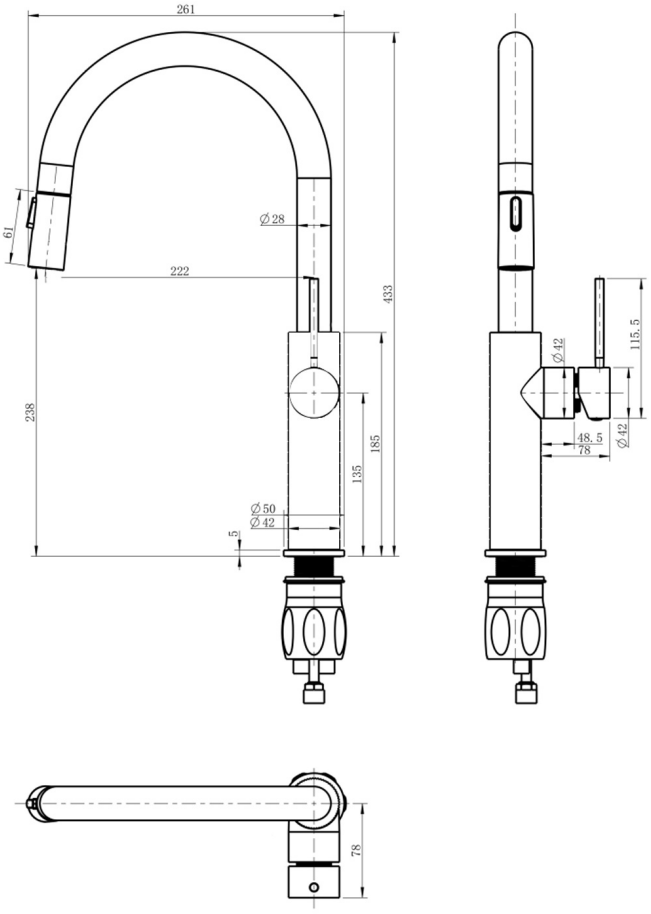
Technical sheet