SPY Concealed Shower/Bath Mixer incl. Hand Shower, 2 Ways, gold

Order code: PY52/17

Size

Width:	330 mm
Height:	90 mm
Depth:	89 mm

Properties

Warranty:	6 years
Colour:	Gold
Material:	Brass
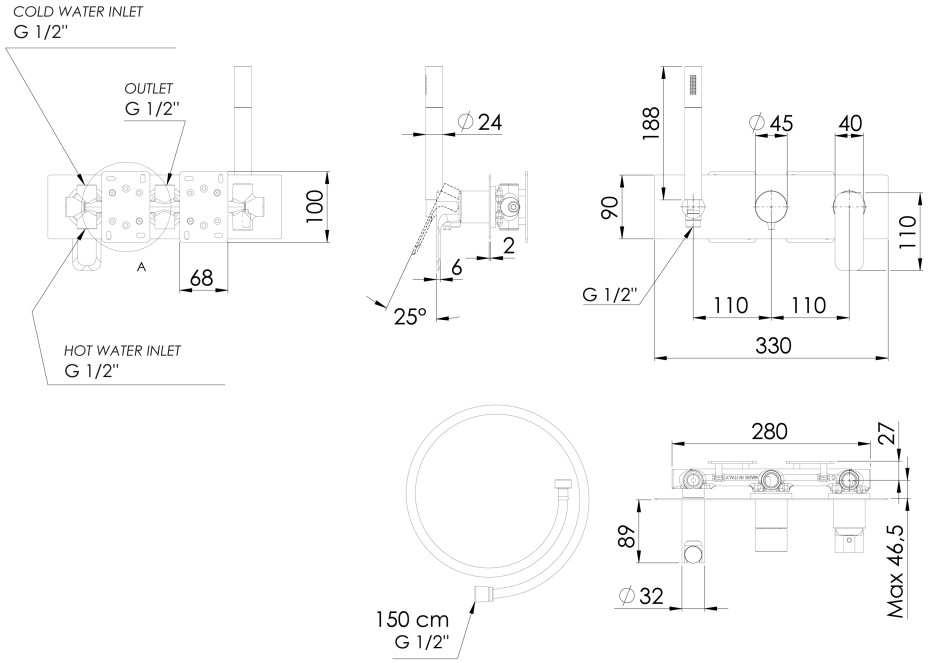
Technical sheet