BEBÉ Wall mounted bath mixer, bronze

Order code: BB010/18

Size

Width:	213 mm
Height:	130 mm
Depth:	196 mm

Properties

Colour:	Bronze
Material:	Brass
Warranty:	6 years

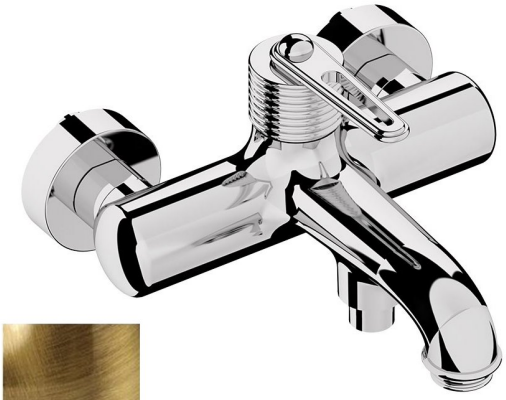
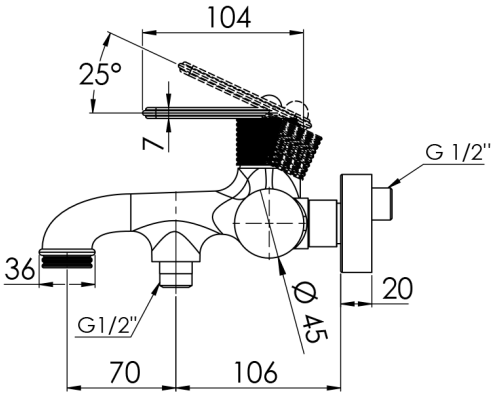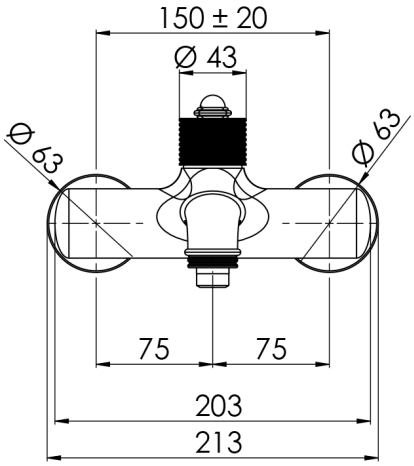
Technical sheet