BEBÉ concealed basin mixer, bronze

Order code: BB018/18

Size

Width:	170 mm
Height:	60 mm
Depth:	178 mm

Properties

Colour:	Bronze
Material:	Brass
Warranty:	6 years
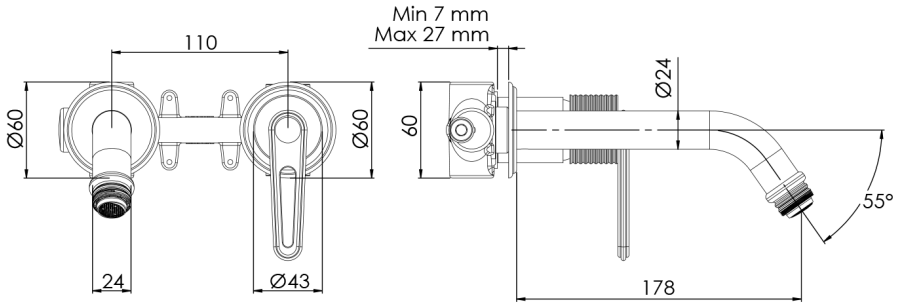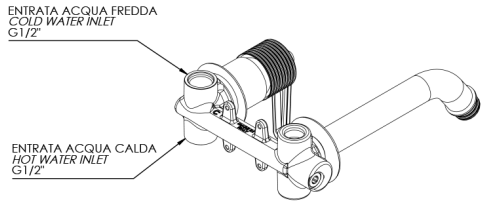
Technical sheet