BEBÉ Wall mounted bath mixer, chrome

Order code: BB010

Size

Width:	213 mm
Height:	130 mm
Depth:	196 mm

Properties

Colour:	Chrome
Material:	Brass
Warranty:	6 years

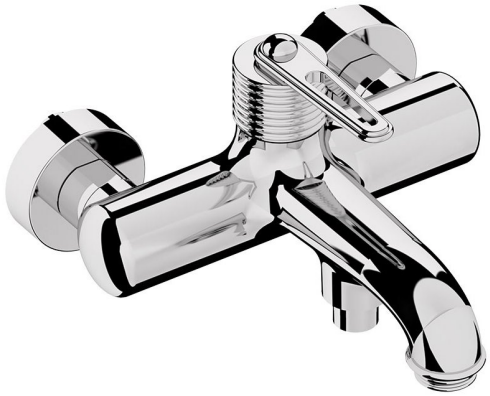
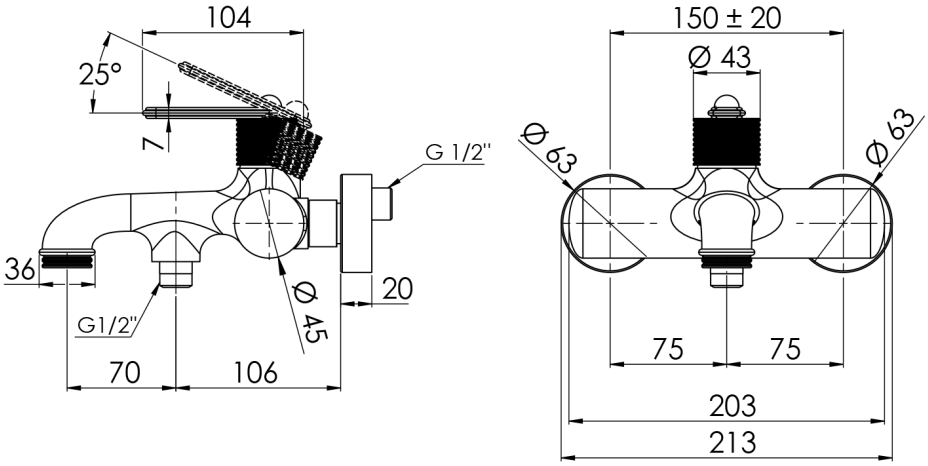
Technical sheet