# FORATA Freestanding Bath Mixer Tap (floor connection), white matt

**Order code:** FT021/14

**Size**

| | |
|---|---|
| Width: | 42 mm |
| Height: | 927 mm |
| Depth: | 215 mm |

**Properties**

| | |
|---|---|
| Colour: | White matt |
| Material: | Brass |
| Warranty: | 6 years |
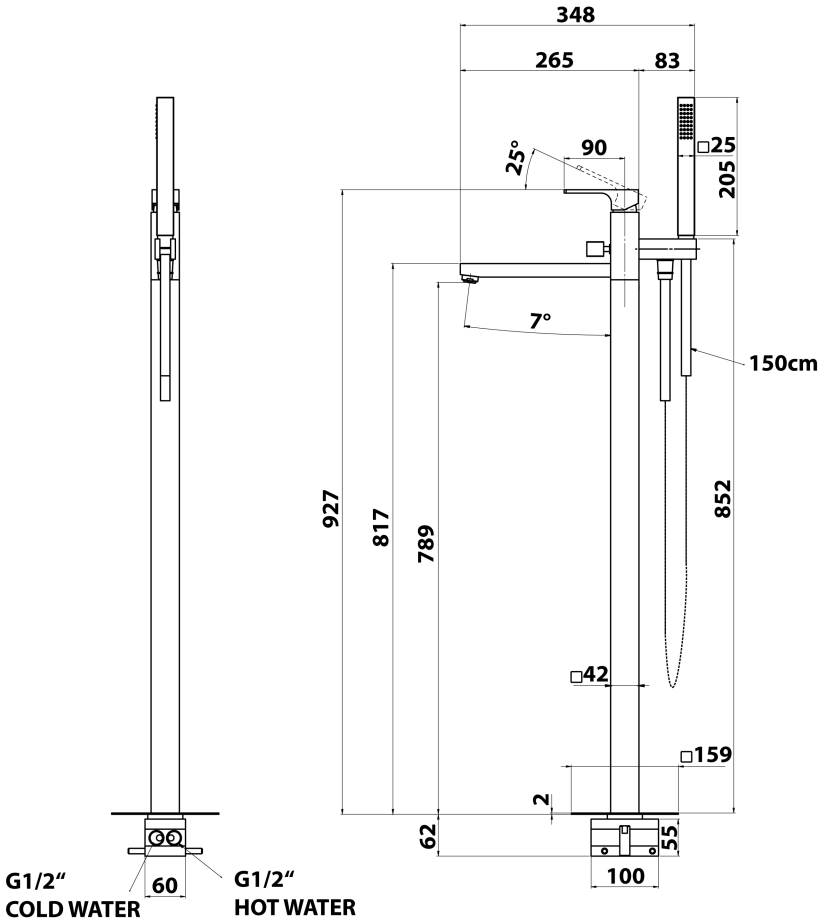
## Technical sheet