FORATA Washbasin Mixer Tap, high, Long Spout, black matt

Order code: FT007/15

Size

Width:	55 mm
Height:	322.5 mm
Depth:	185 mm

Properties

Warranty:	6 years
Colour:	Black matt
Material:	Brass
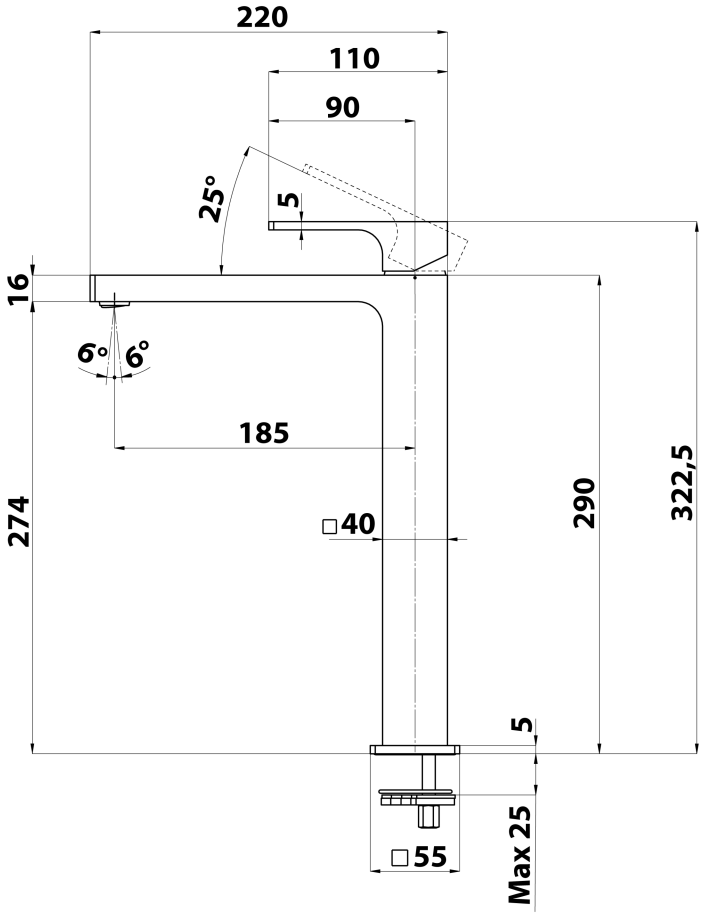
Technical sheet