Washbasin siphon 5/4", drain 32mm, round, white matt

Order code: SI514

Properties

Colour: White matt
Material: Brass
Warranty: 2 years
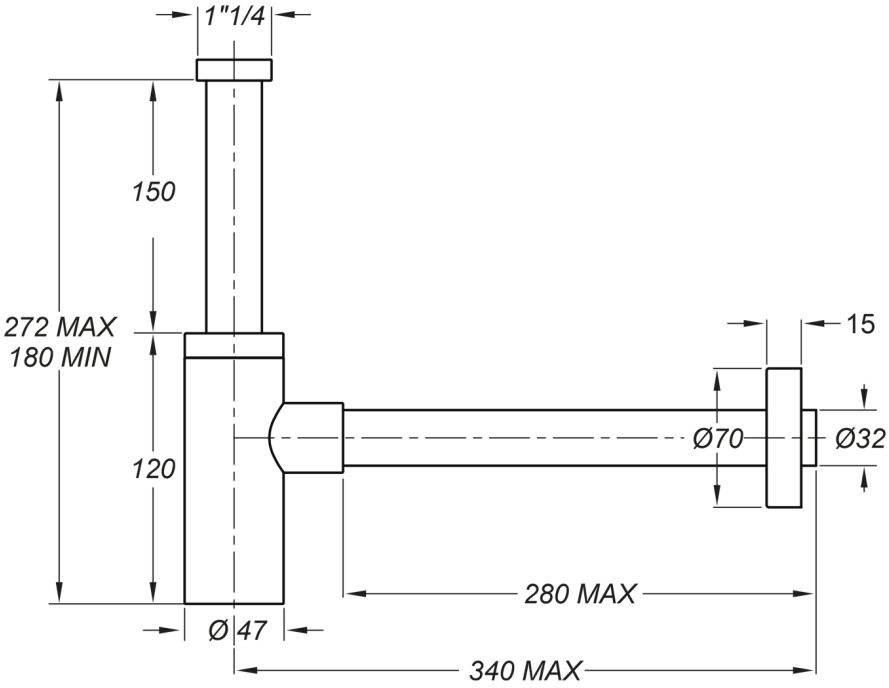
Technical sheet