Hanging washing trough 1200x130x500 mm, brushed stainless steel

Order code: 13050.12.SP.S

Size

Width:	1200 mm
Height:	130 mm
Depth:	500 mm

Properties

Colour:	Stainless steel matt
Material:	Stainless steel
Warranty:	2 years
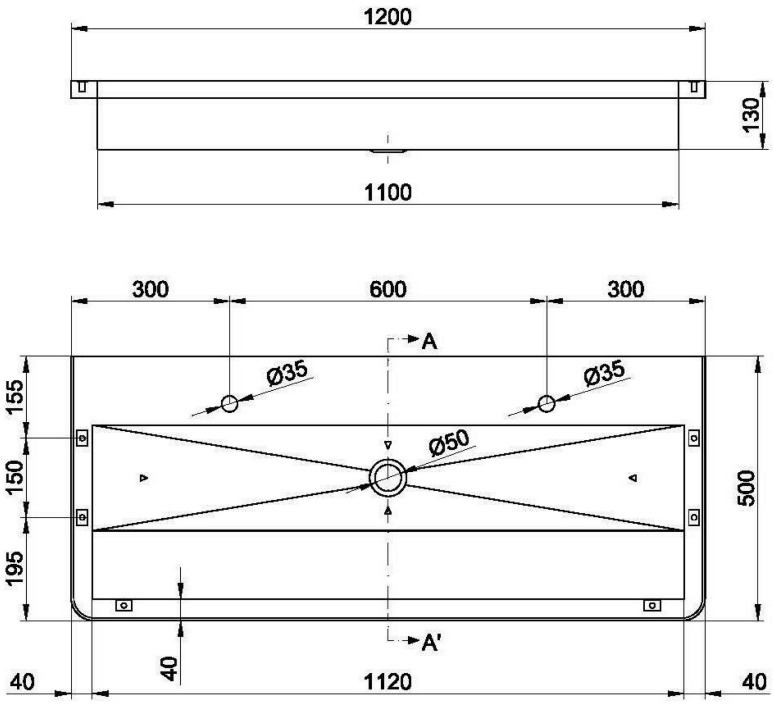
Technical sheet