TWIGA washbasin table 90x72x50 cm, matt matt/ancient oak

Order code: VC442W-90-5

Size

Width:	900 mm
Height:	720 mm
Depth:	500 mm

Properties

Colour:	White matt
Decor:	Oak old white
Material:	DTD/HPL laminát/Steel
Warranty:	2 years
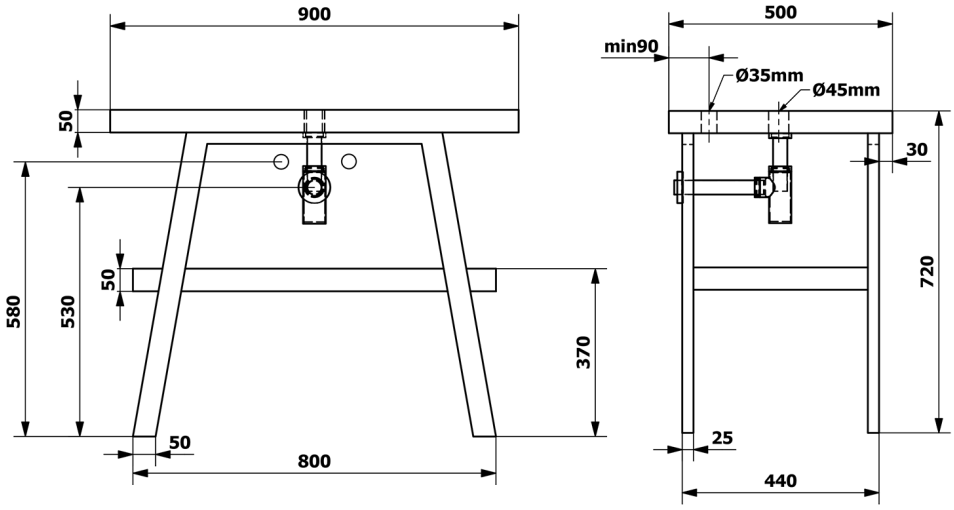
Technical sheet