TWIGA washbasin table 80x72x50 cm, matt matt/Old wood

Order code: VC442W-80-8

Size

Width:	800 mm
Height:	720 mm
Depth:	500 mm

Properties

Colour:	White matt
Decor:	Old wood
Material:	DTD/HPL laminát/Steel
Warranty:	2 years
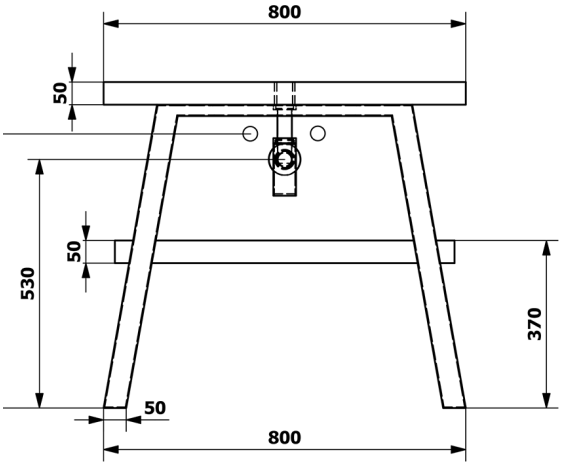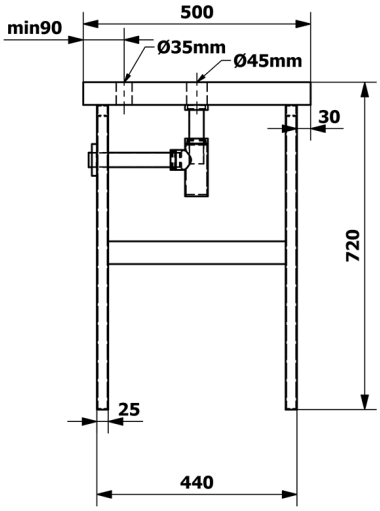
Technical sheet