Nera wall-hung WC with concealed plasterboard cistern and Geberit push button, white

Order code: WC-SADA-16

Size
Width: 355 mm
Depth: 500 mm

Properties
Colour: White
Material: Ceramic
Warranty: 2 years

Technical sheet

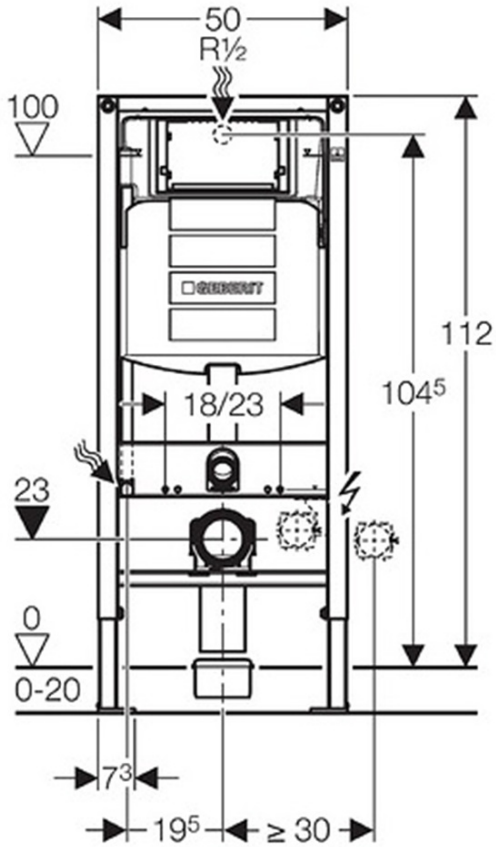

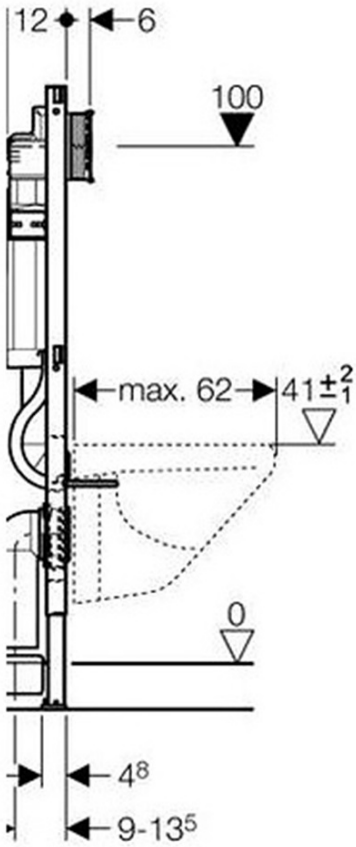

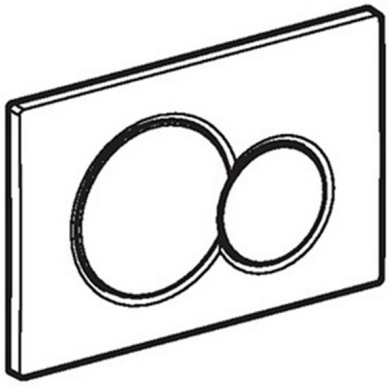

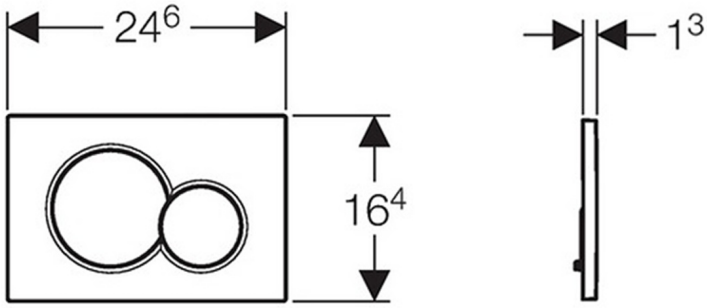
24⁶
16⁴
1³

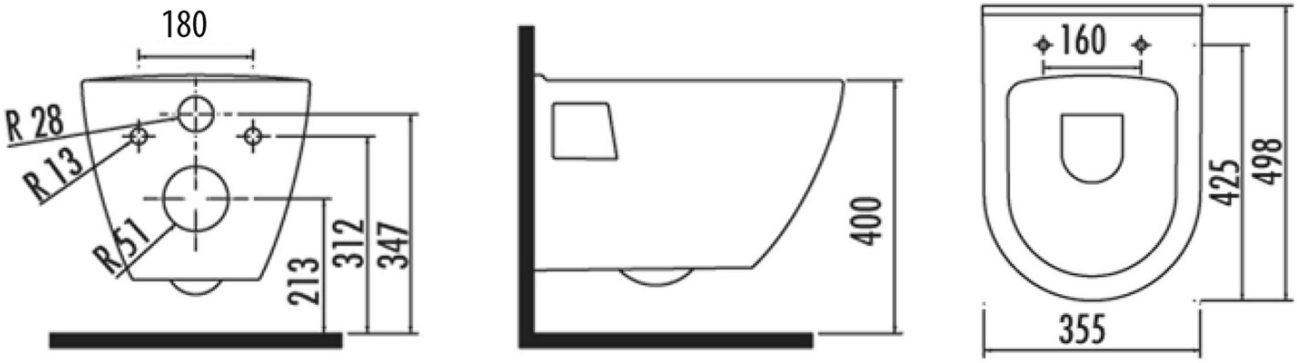
180
R 28
R 13
R51
213
312
347
400
160
425
498
355