CLIFTON Corner Toilet, Dual Flush 3/6l, white

Order code: FS1PK

Size

Width:	367 mm
Height:	785 mm
Depth:	747 mm

Properties

Colour:	White
Material:	Ceramic
Warranty:	2 years
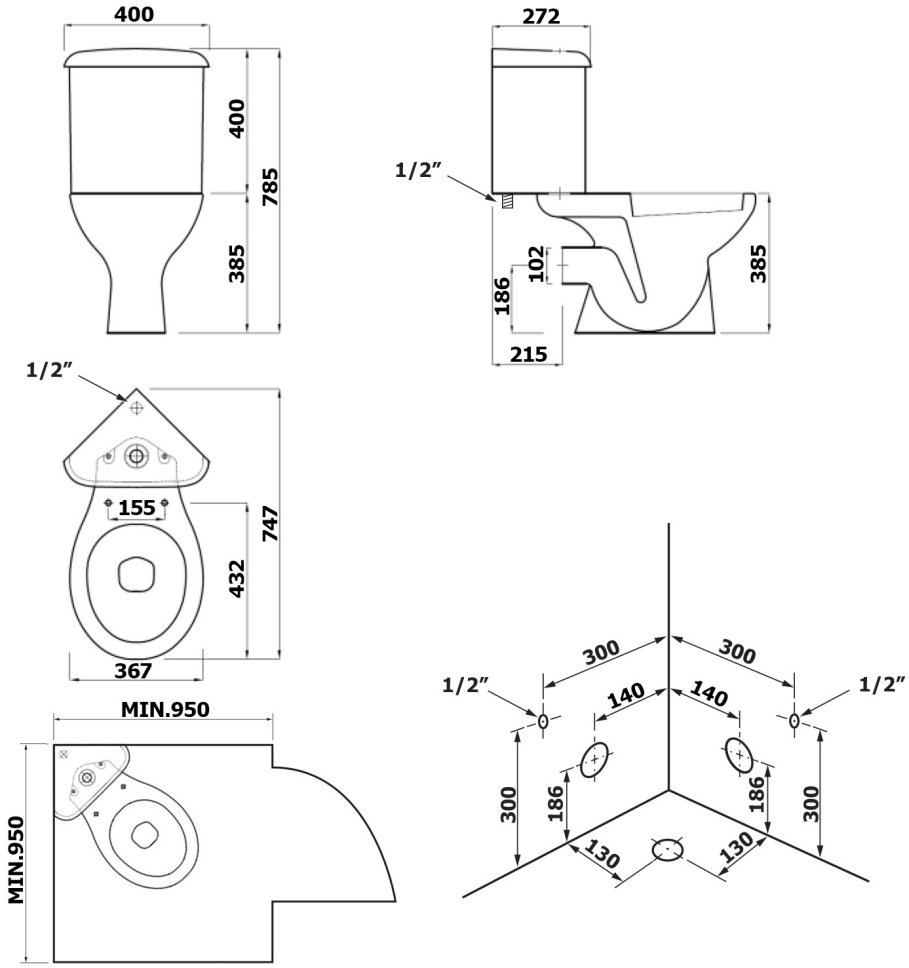
Technical sheet