Inset Granite Sink with drainer, 97x50cm, black

Order code: GR1614

Size

Width:	970 mm
Height:	215 mm
Depth:	500 mm

Properties

Colour:	Black
Material:	Granite
Warranty:	2 years
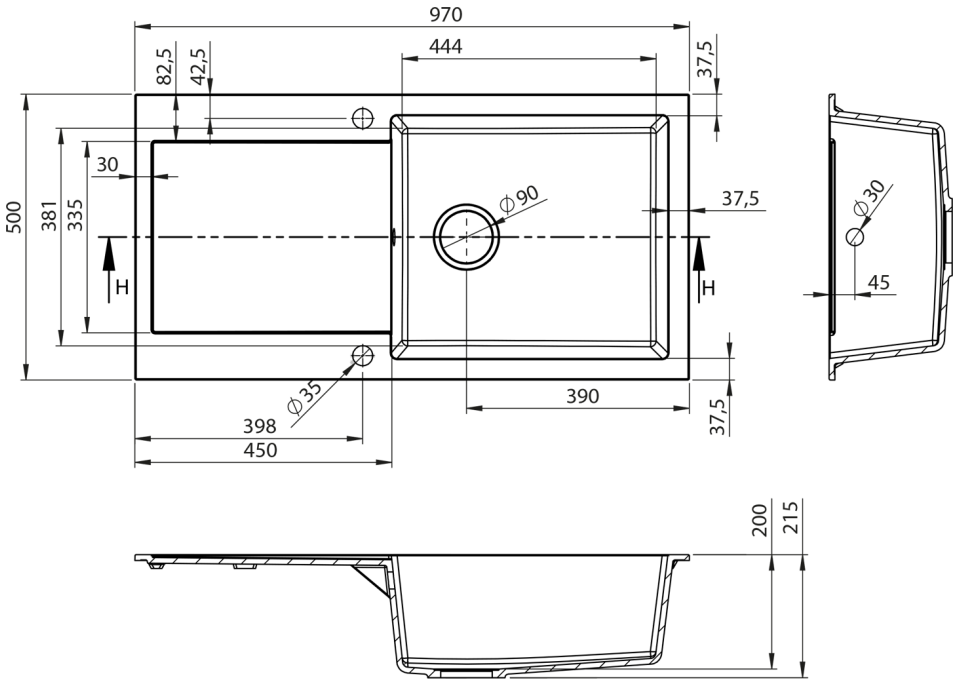
Technical sheet