Inset Granite Sink with drainer, 71x50cm, black

Order code: GR6534

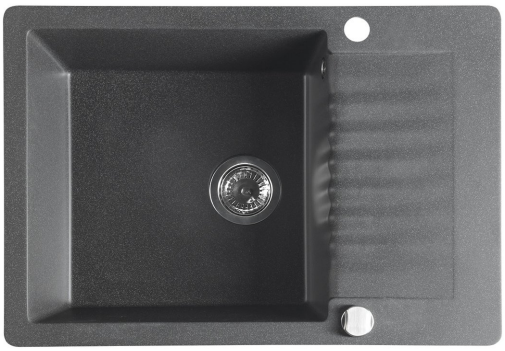

Size

Width:	710 mm
Height:	200 mm
Depth:	500 mm

Properties

Colour:	Black
Material:	Granite
Warranty:	2 years
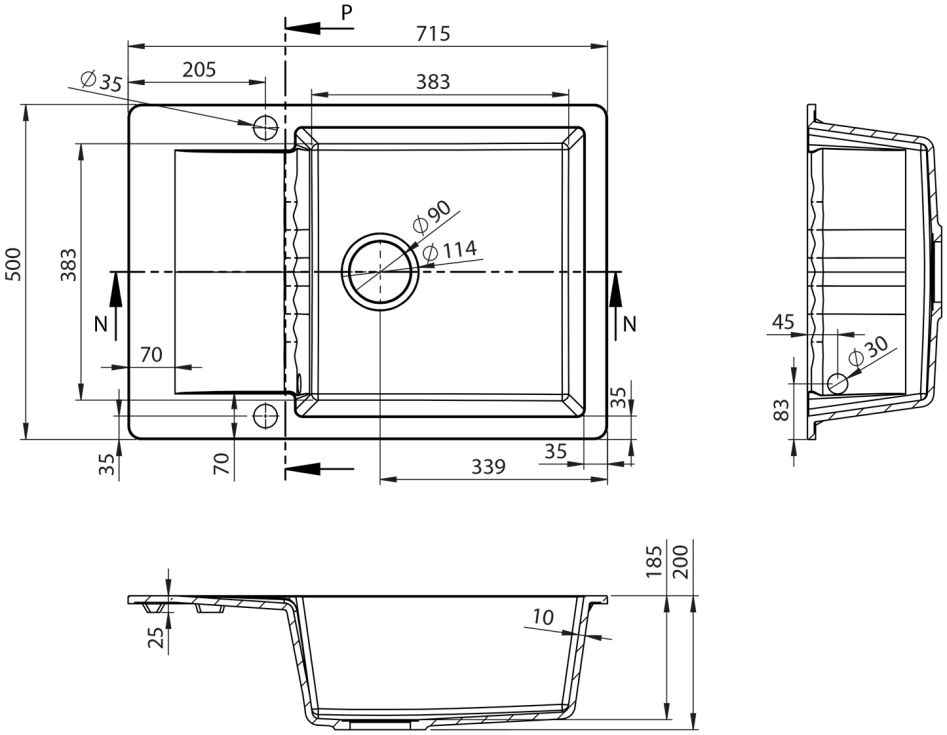
Technical sheet