Corner Granite Kitchen Sink 114x57,5cm, beige

Order code: GR1932

Size

Width:	1140 mm
Height:	205 mm
Depth:	575 mm

Properties

Colour:	Beige
Material:	Granite
Warranty:	2 years
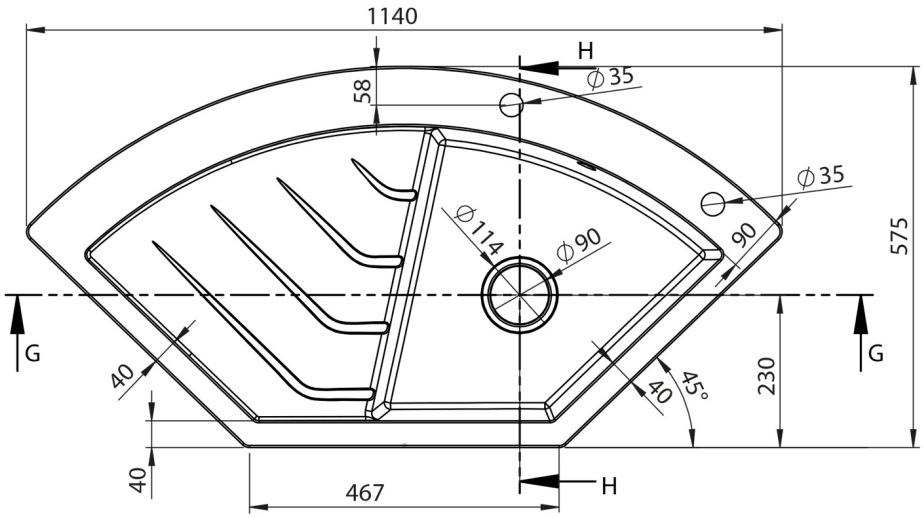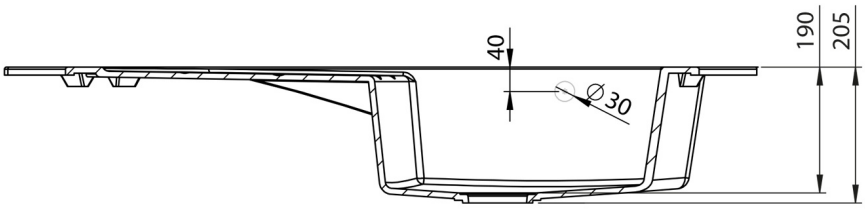
Technical sheet