MARLENE D MONOLITH Rectangular Bath 185x85x63cm, White

Order code: 71607MD

Size

Length:	1850 mm
Width:	850 mm
Height:	630 mm
Volume:	372 l

Properties

Colour:	White
Material:	Acrylate
Warranty:	10 years
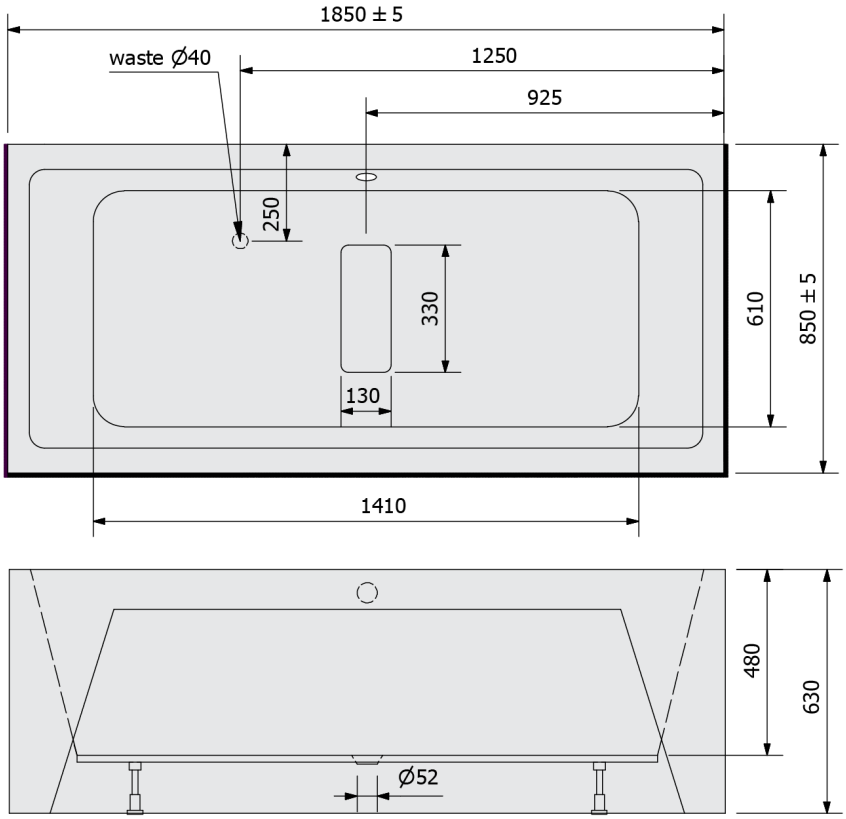
Technical sheet