DIRECT bathroom radiator 600x1700 mm, silver structural

Order code: ILS66E

Size

Width:	605 mm
Height:	1700 mm
Volume:	8.2 l

Properties

Colour:	Silver
Material:	Steel
Warranty:	2 years
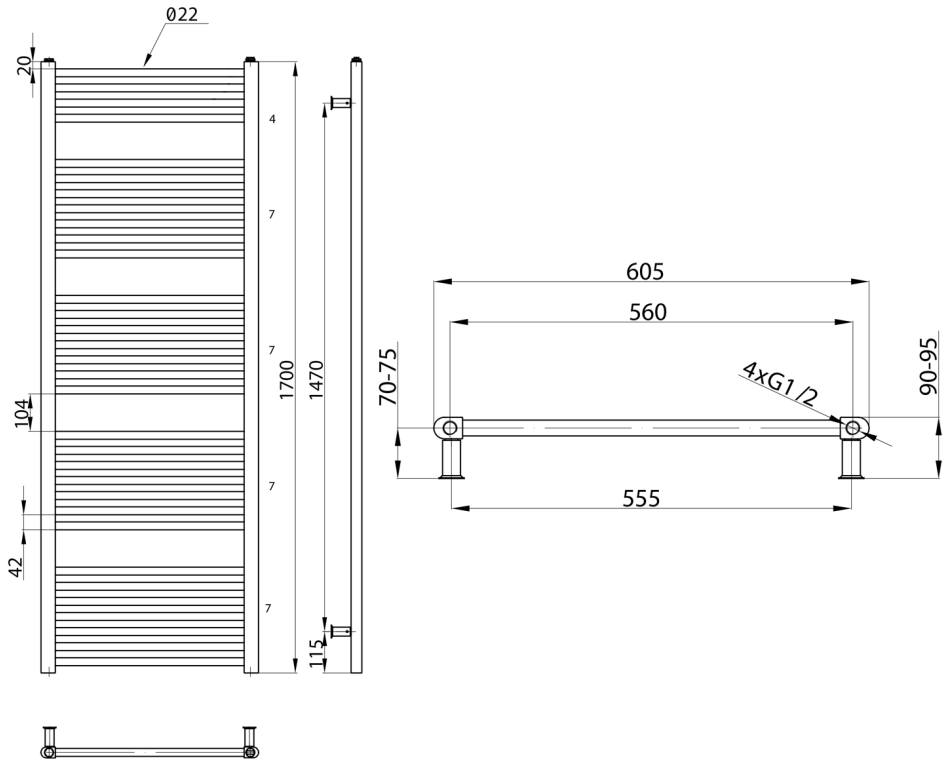
Technical sheet