BLOK Stone Washbasin 30x30cm, black anthrazit

Order code: 2401-29

Size

Width:	300 mm
Height:	100 mm
Depth:	300 mm

Properties

Colour:	Black
Material:	Stone
Warranty:	2 years
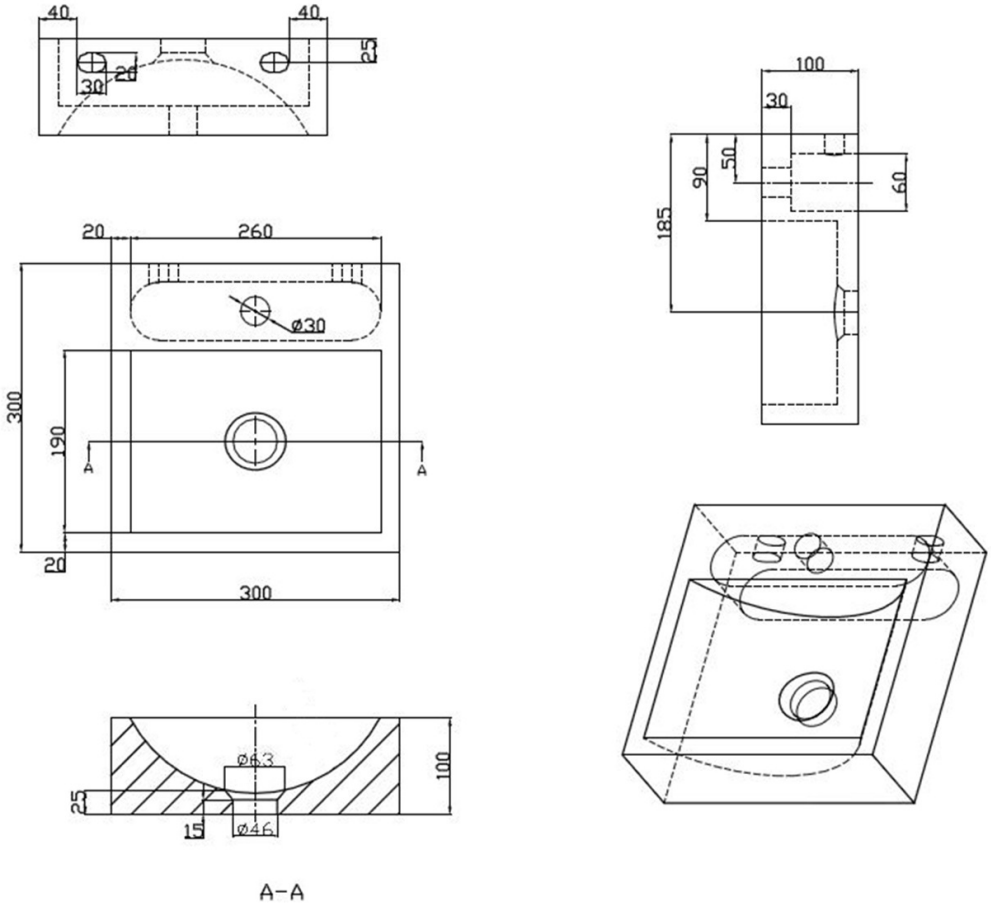
Technical sheet