KIVA stainless steel built-in sink with drainer 79x48 cm, right

Order code: EP829R

Size

Width:	790 mm
Height:	200 mm
Depth:	480 mm

Properties

Colour:	Stainless steel
Material:	Stainless steel
Warranty:	8 years
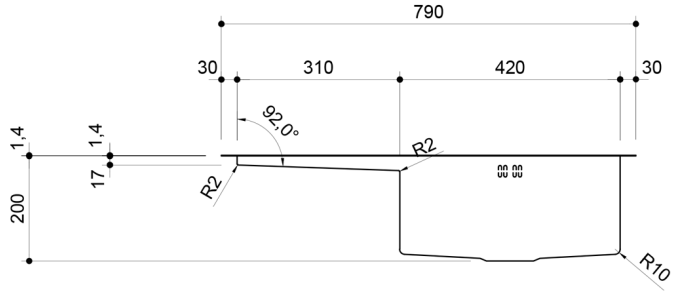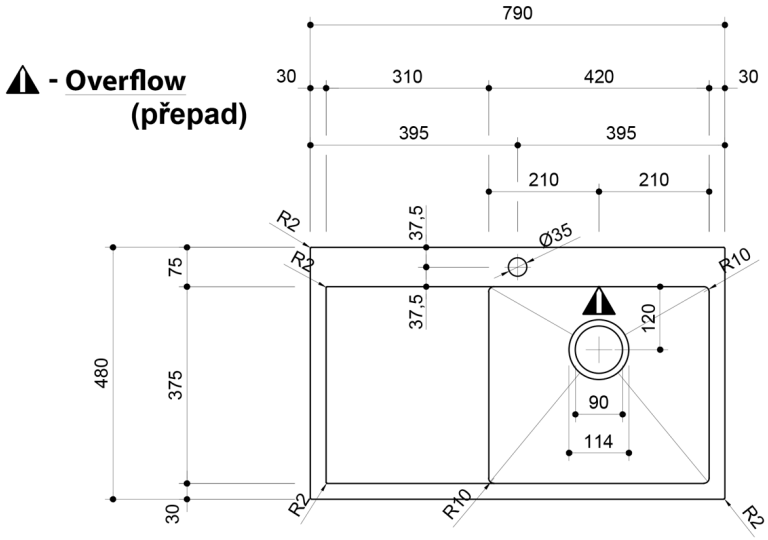
Technical sheet