TRIANGL Stainless Steel Drain Channel, 293x293 mm

Order code: FP790

Size

Length:	293 mm
Width:	293 mm
Height:	82 mm

Properties

Colour:	Stainless steel
Material:	Stainless steel
Warranty:	2 years
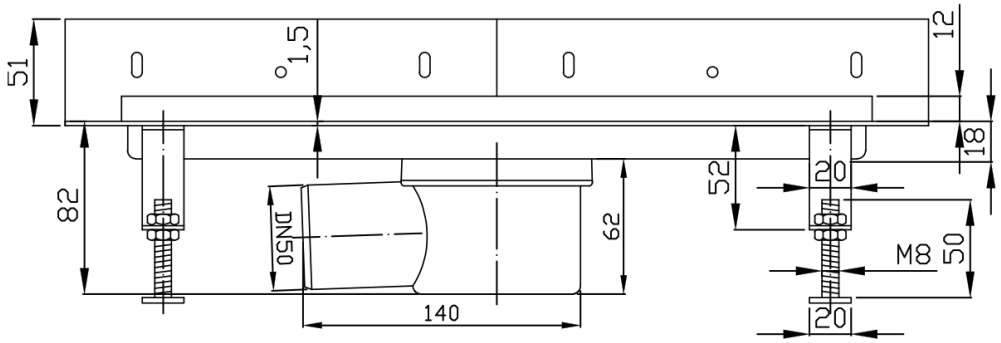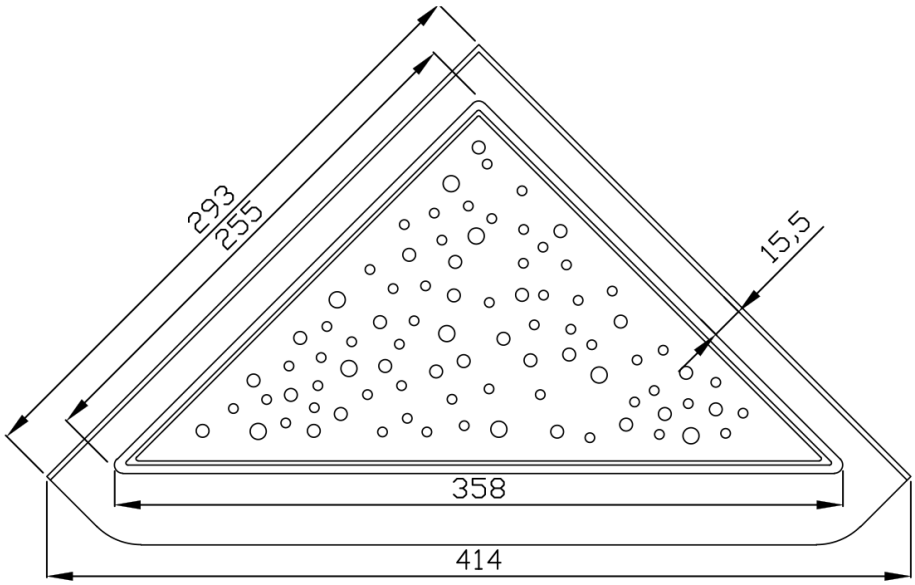
Technical sheet