Back Draught Shutter, 1/2"x1/2", chrome

Order code: ADA11

Properties

Colour:	Chrome
Material:	Brass
Warranty:	6 years
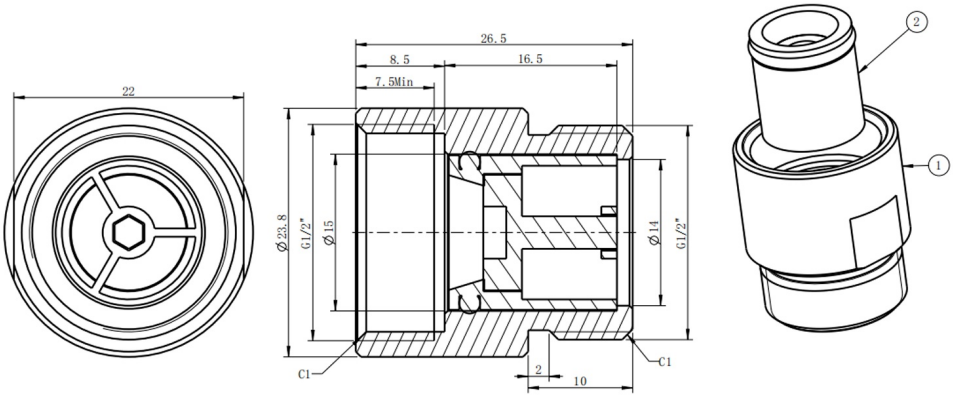
Technical sheet