AMAROK Cast Marble Washbasin 40x22cm, left/white

Order code: AR400

Size

Width:	400 mm
Height:	110 mm
Depth:	220 mm

Properties

Colour:	White
Material:	Cast marble
Warranty:	2 years

Technical sheet

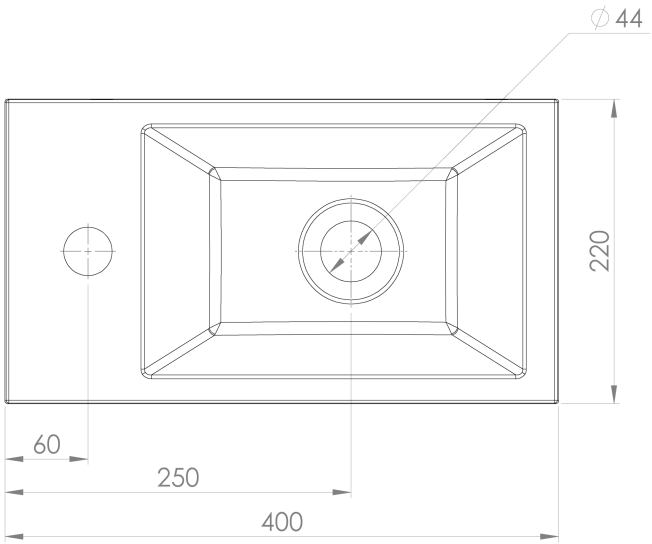

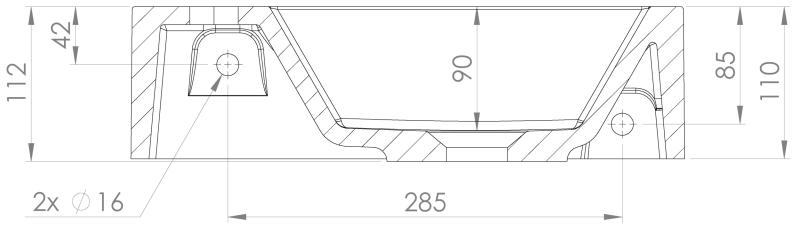

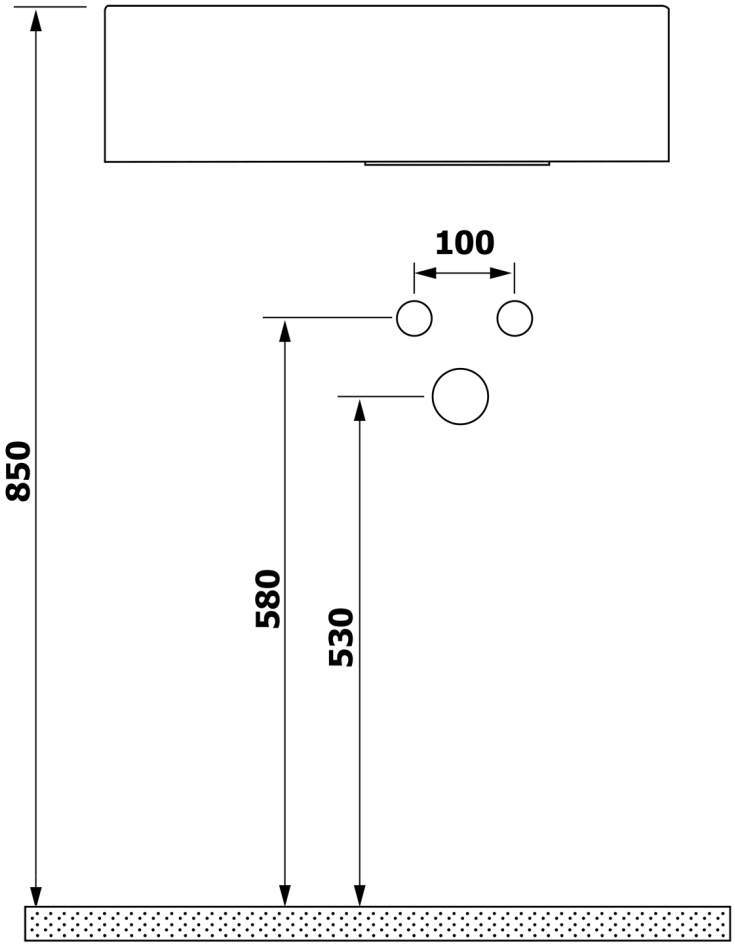
100
850
580
530