MAKALA Vanity Unit 89,5x35x45,2 cm, Silver Oak

Order code: ML091

Size

Width:	895 mm
Height:	350 mm
Depth:	452 mm

Properties

Colour:	Silver
Decor:	Oak silver
Material:	MDF/laminate
Warranty:	2 years
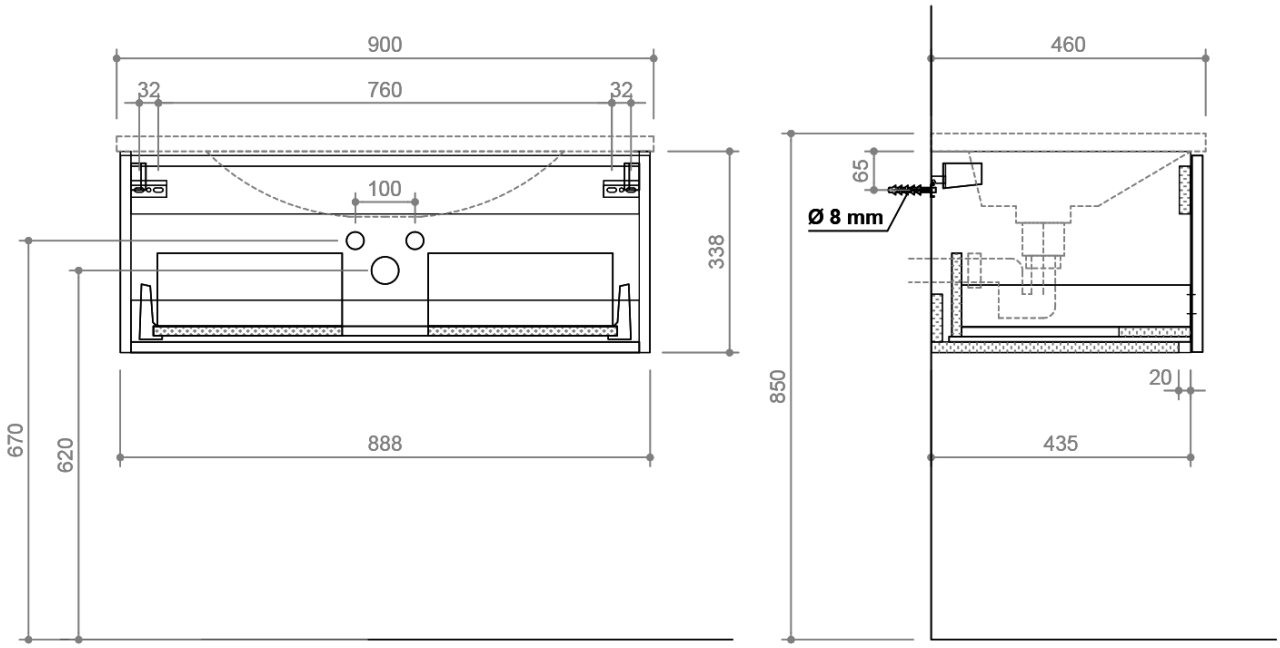
Technical sheet