SASSARI Concealed Shower Mixer incl. Hand Shower, 2 Ways, bronze

Order code: SR493BR

Size
Width: 350 mm
Height: 110 mm

Properties
Colour: Bronze
Material: Brass
Warranty: 5 years
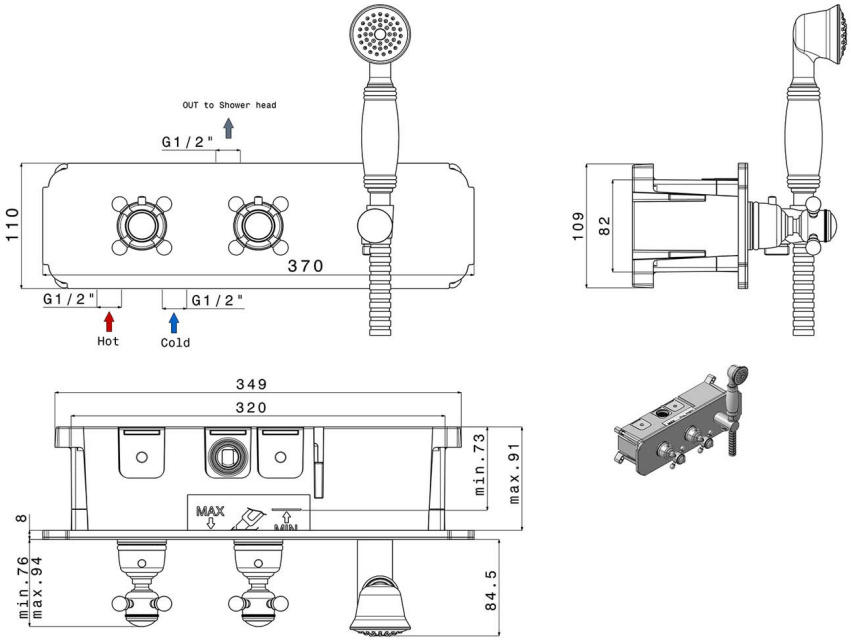
Technical sheet