# JUNO Cultured Marble Washbasin 100x47cm, white

**Order code:** JU100

**Size**

| | |
|---|---|
| Width: | 1000 mm |
| Depth: | 470 mm |

**Properties**

| | |
|---|---|
| Colour: | White |
| Material: | Cast marble |
| Warranty: | 2 years |
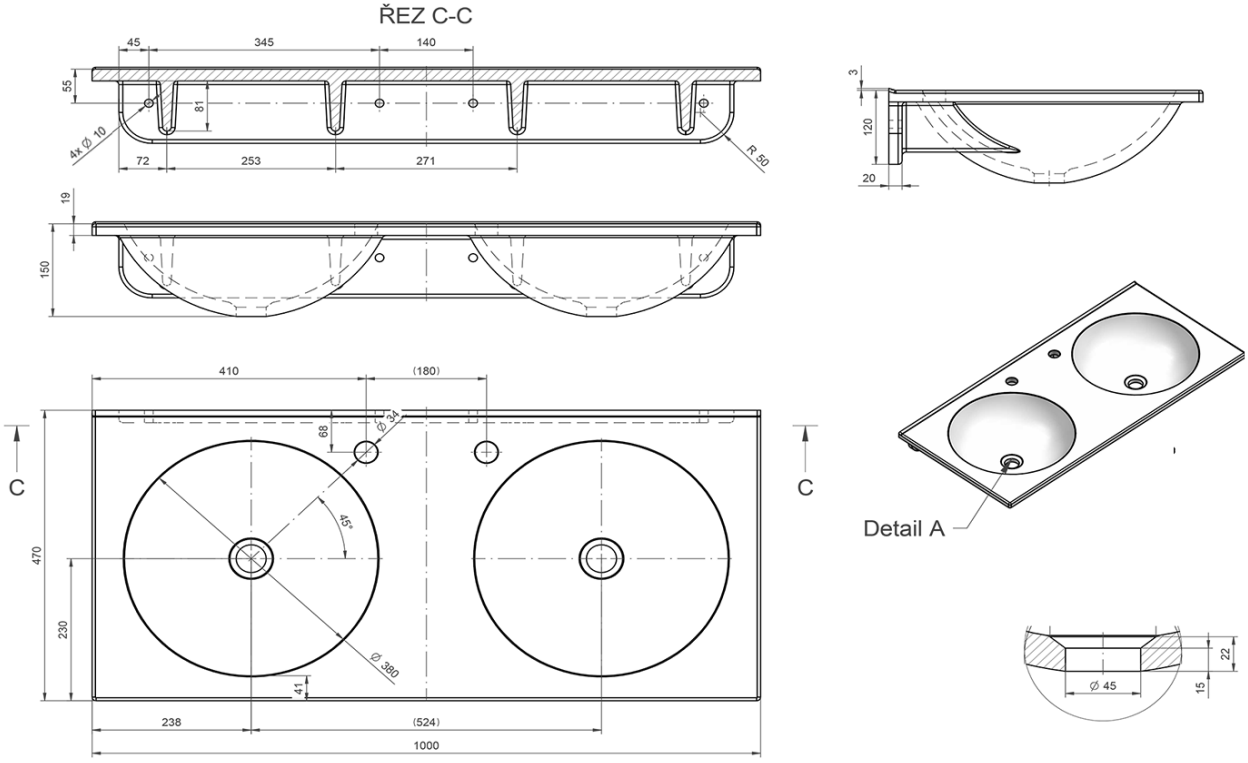
## Technical sheet