WHITE LINE towel holder 70cm, white

Order code: 8012

Basic information

Brand:	Aqualine
Series:	WHITE LINE

Size

Length:	774 mm
Width:	774 mm
Height:	54 mm
Depth:	112 mm

Properties

Colour:	White
Material:	Steel
Shape:	Circular
Type:	Towel holder: single arm
Installation:	Drilling
Weight / Piece:	0.67 kg
Packing:	1 Piece
Guarantee:	2 years
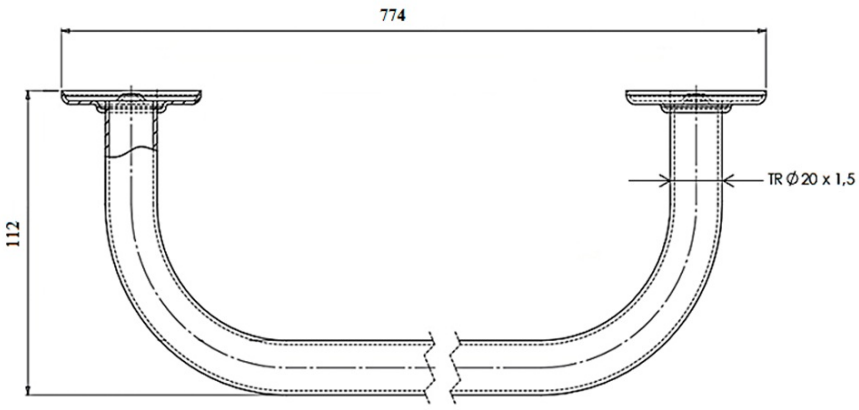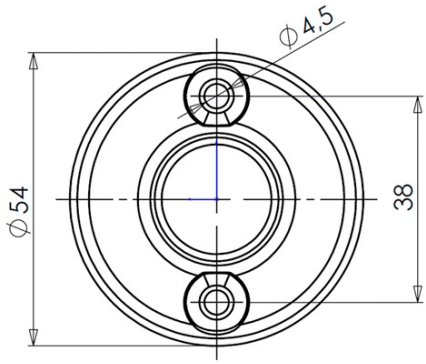
Technical sheet