KALI cabinet incl. washbasin 150x50x46 cm, Nut Bruno

Order code: 2X560771601-150

Basic information

Brand:	Sapho
Series:	KALI

Size

Width:	1500 mm
Height:	500 mm
Depth:	460 mm

Properties

Colour:	Brown
Decor:	Bruno Walnut
Material:	MDF/laminate
Installation:	Wall-Hung
Type of cabinet:	Drawers
Type washbasins:	Double basin
Equipment:	Automatic closing, RAL colors upon request
Weight / Piece:	86.0 kg
Packing:	3 Piece
Guarantee:	2 years
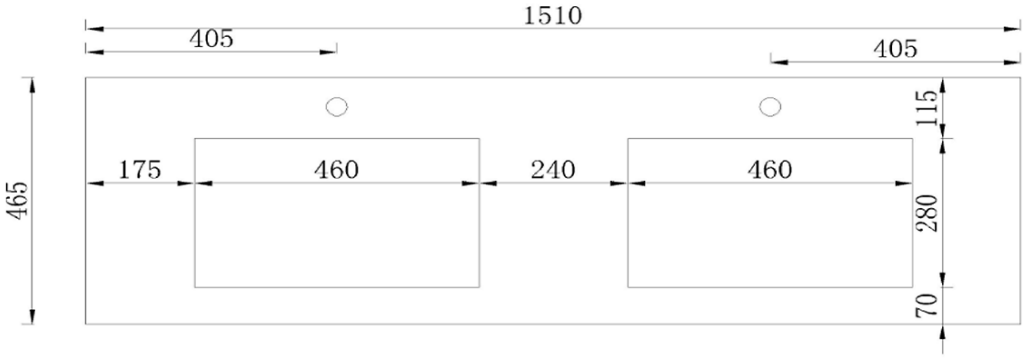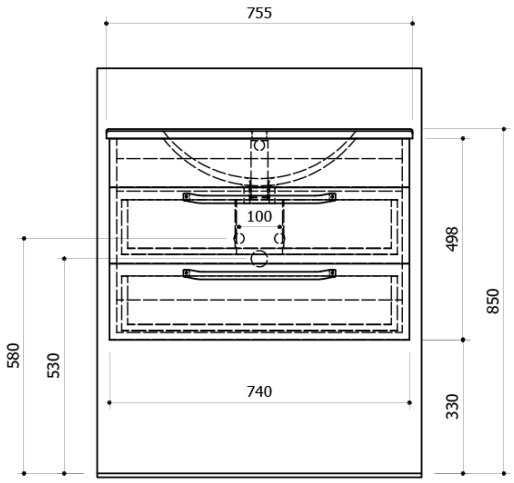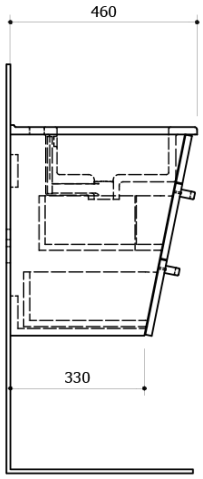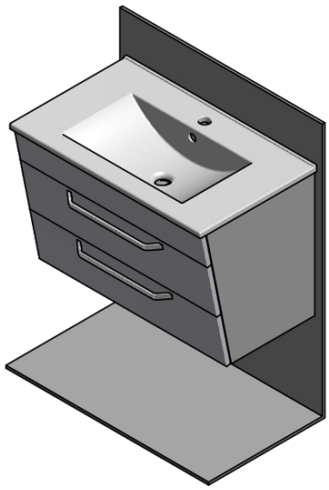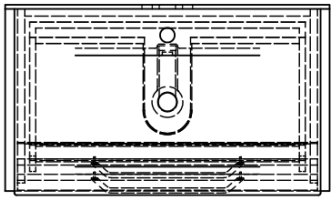
Technical sheet