ERIKA Quadrant Cast Marble Shower Tray 90x90cm, R550, White

Order code: GC559

Size
Length: 900 mm
Width: 900 mm
Height: 30 mm

Properties
Colour: White
Material: Cast marble
Warranty: 3 years
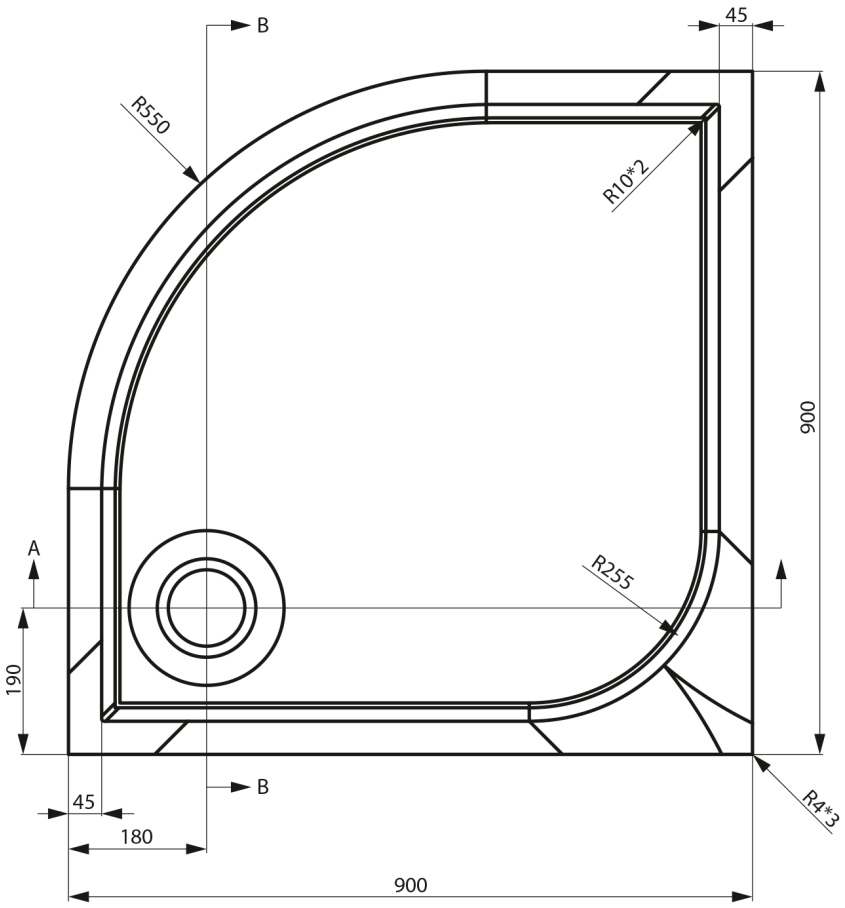
Technical sheet