KIRKÉ basin mixer with pop up waste, bronze

Order code: KI02B

Size
Width: 65 mm
Height: 166 mm
Depth: 115 mm

Properties
Colour: Bronze
Material: Brass
Warranty: 6 years
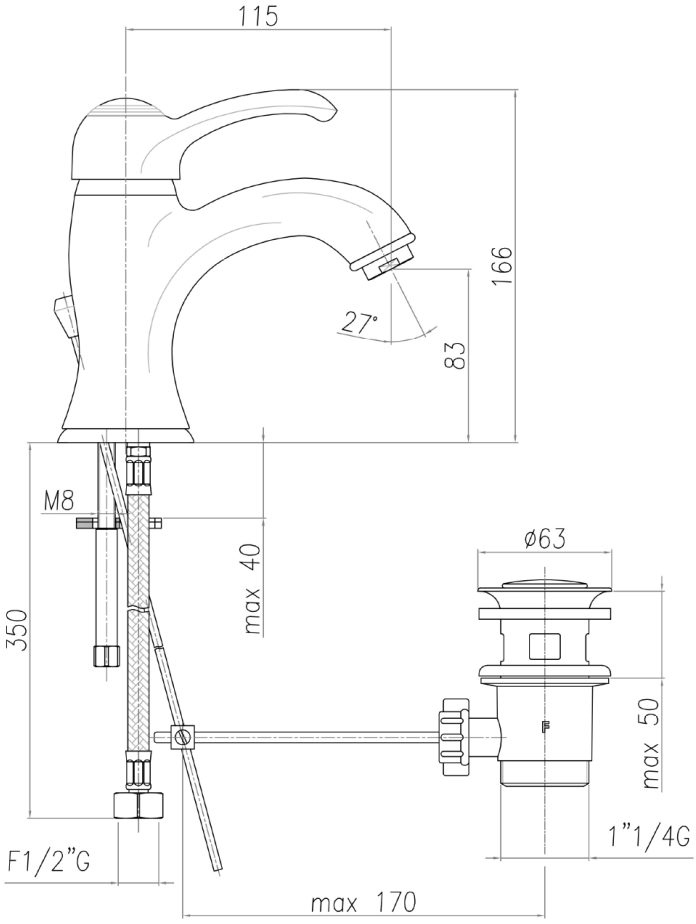
Technical sheet