LATUS VI Basin Cabinet 50x50x22 cm, left, Oak Venice

Order code: LT615-1414

Size

Width:	500 mm
Height:	500 mm
Depth:	220 mm

Properties

Colour:	Brown
Decor:	Venice oak
Material:	MDF/laminate
Warranty:	2 years
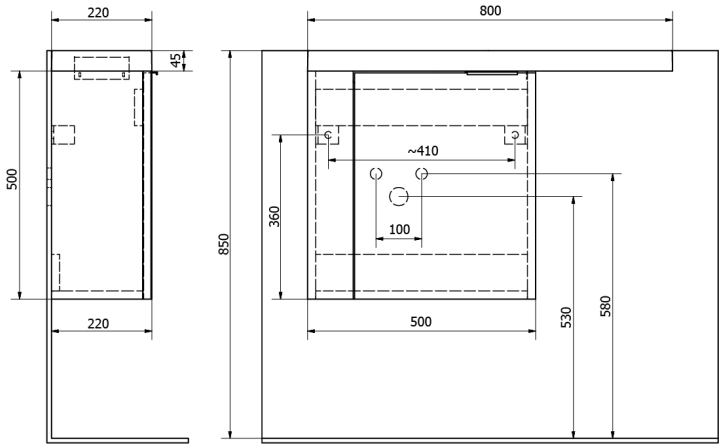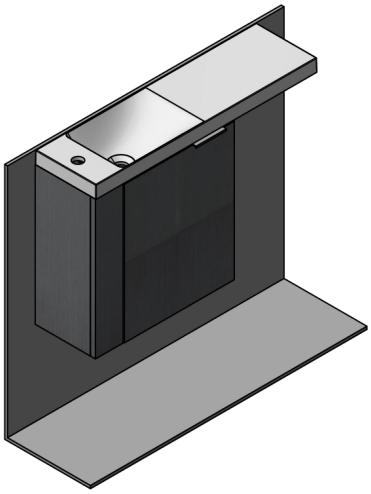
Technical sheet