FLUE stainless steel shower drain with grid, 630x115x82mm

Order code: 74576

Basic information

Brand:	Polysan
Series:	FLUE

Size

Length:	630 mm
Width:	115 mm
Height:	82 mm

Properties

Colour:	Stainless steel
Material:	Stainless steel
Installation:	Freestanding
Waste diameter:	50 mm
Shower channel length from:	630 mm
Shower channel length to:	630 mm
Weight / Piece:	2.65 kg
Packing:	1 Piece
Guarantee:	2 years
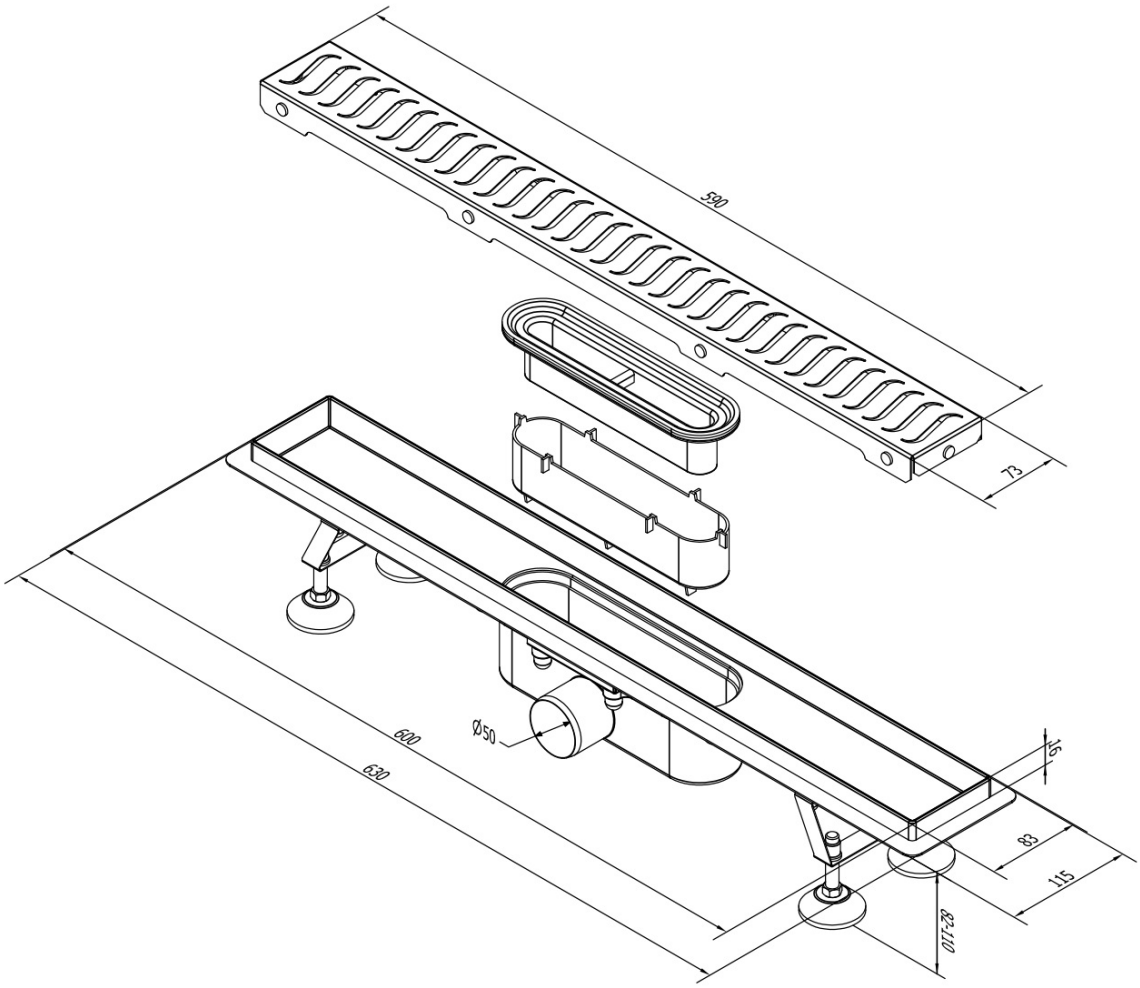
Technical sheet